Alton Highway Policies and Regulations

Section 1. ENABLING AUTHORITY

1.1 The Alton Board of Selectmen, acting under the authority and duties described in RSA 31, 41, 47, 229, 230, 231, 236, 265, 507, 647:40-a, 674:41, Article 33 of a Town Meeting vote held on March 12, 1994, and numerous decisions of the New Hampshire Supreme Court; hereby adopts these policies and regulations which shall apply to all persons and have the full effect of law within the corporate limits of the Town of Alton.

1.2 These policies and regulations may be amended at anytime by the Board of Selectmen, or by a majority vote of the Town Meeting to the extent permitted by State Law.

1.3 In the event any court of law having jurisdiction over these matters shall rule a Section contained herein to be unlawful, the remainder of these policies and regulations shall remain in effect.

1.4 In the event legislation is enacted which conflicts with any of the provisions contained herein, the Board of Selectmen shall, within thirty (30) days, amend the applicable Section(s) in such a manner as to comply with said legislation.

Section 2. REPEAL OF PREVIOUS REGULATIONS, POLICIES, AND ORDINANCES

The following list of regulations, policies and ordinances are hereby superseded and repealed. Upon adoption of this version of Highway Polices and Regulations. they shall be null and void.

(a) An Ordinance Regulating Heavy Hauling Over Town Roads, Streets and Bridges, adopted March 13, 1989.

(b) Road Layout Policy, adopted June 7, 1993.

(c) A Policy for Protection of Roads, Right-of-Ways and Other Town Property as a Result of Timber Cuts, Construction Projects and Excavation, adopted June 14, 1993.

(d) Minimum Design Standards for Roads and Streets, adopted December 11, 1987.

(e) An Ordinance Regulating the Occupancy of Public Grounds, Rights-of-Way and Sidewalks, adopted October 10, 1978.

(f) A Regulation Relative to Prohibiting Snow Obstruction on Town Roads and Public Sidewalks, adopted January 12, 1994.

(g) A By-Law Relative to Highway and Traffic Regulations pertaining to Unnecessary Noise, adopted August 5, 1980.

(h) A Restricted Roadway Policy Relative to Letter "S" Road, adopted April 4, 1988.

(i) A Restricted Roadway. Policy Relative to Parking along Main Street, adopted January 12, 1988.

(j) A Restricted Roadway Policy Relative to the use of School Street by Heavy Trucks, adopted August 27, 1990.

(k) A Regulation Relative to Highway and Traffic Ordinances pertaining to Vehicles: Stop, Stand or Park, adopted February 9, 1987.

(l) All ordinances and regulations relative to posted speed limits on Town, roads which have been heretofore adopted.

(m) All ordinances and regulations relative to posted signs and traffic restrictions on Town roads which have been heretofore adopted.

(n) A Highway Ordinance relative to Winter Parking adopted December 13 1973.

(o) All previous versions of these Highway Polices and Regulations which have been heretofore adopted.

Section 3. DEFINITIONS

3.1 Except as may be otherwise noted below, the definition pertaining to any word contained in these policies and regulations shall refer to the manner in which it is described by applicable Titles of the New Hampshire Revised Statutes Annotated.

3.2 In the event no definition is found in the RSA's or if there are conflicting meanings or if a definition is vague and ambiguous, the Selectmen shall decide as to a word's meaning and said definition shall be incorporated into these policies and regulations. The Selectmen shall consult a recent edition of a modern American-English dictionary whenever called upon to exercise the authority granted under this Section.

3.3 The following words are hereby defined:

(a) AASHTO shall refer to the criteria as set forth in the most recent edition of the design manual published by the American Association of State Highway and Transportation Organizations.

(b) BRIDGE shall be defined as a man-made object used to traverse a ditch, water course or natural barrier, to include culverts and any elevated means of crossing over a highway.

(c) CENTERLINE shall be defined as the middle of a traveled way.

(d) CONSTRUCTION PROJECT shall be defined as any activity which requires the issuance of a permit under the Building Regulations of the Town or construction of a private road.

(e) DRIVEWAY shall be defined as any path of access used by motor vehicles to gain entry upon private property from a public right-of-way. This includes parking pads, private roads and any other means of access to public or private property from a public highway.

(f) EXCAVATION shall be defined as any form of digging operation. by which material is removed and/or relocated.

(g) HEAVY EQUIPMENT shall be defined as any motor vehicle or trailer unit which exceeds a gross weight of six tons (twelve thousand pounds).

(h) HIGHWAY shall be defined to include the words street, road, avenue, or any other type of nomenclature which refers to a public right-of-way. For the purposes of these policies and regulations, all of the terms referenced in this Section shall be deemed to be synonymous

(i) INSUFFICIENCY shall mean a safety hazard which is not reasonably discoverable or reasonably avoidable by a person who is traveling upon a Town highway or bridge at a rate of speed which does not exceed the maximum limit and in a manner which is reasonable and prudent as determined by prevailing conditions such as weather, visibility or knowledge of road conditions and potential hazards.

(j) MONETARY DAMAGES may also be defined as a cash value which is placed upon a previously established, property right to which a land owner can document a legal entitlement, upon which said use has been lost or diminished as the result of actions taken by a Town Official under the provisions of these policies and regulations.

(k) NUISANCE shall be defined as an unpleasant, annoying or obnoxious activity, whereby a common sense of decency, as determined by a Town Official, depreciates to a noticeable extent such that the general public is likely to be adversely affected.

(I) PHYSICAL DAMAGES may be defined as any disturbance of shoulders, ditches, embankments, road surface, or the failure to return Town property to a condition which previously existed as determined by the Highway Agent.

(m) PUBLIC HEARING shall be defined as the process by which the Selectmen receive oral statements and written testimony from any person who wishes to express an opinion or statement of fact.

(n) RIGHT-OF-WAY shall be defined as the total area of a highway which encompasses all of the land over which the Town has a legal interest. through instruments of deed, easement, statutorily prescribed claims or the result of judicial proceedings which have jurisdiction.

(o) SIDEWALK shall be defined as a path used primarily for pedestrian travel which is located within a right-of-way.

(p) TOWN OFFICIAL shall be defined as any person acting in an authorized capacity on behalf of the Town.

(q) TRAFFIC INVESTIGATION shall be defined as a process whereby a Town Official authorizes or conducts a study of road conditions and/or traffic patterns for the purposes of determining any highway regulation or other highway safety requirements.

(r) TRAILER shall be defined as any vehicle which is pulled behind a motor vehicle or is self-propelled and used or designed for the purpose of transporting cargo.

(s) TRAVELED WAY shall be defined as the portion of a right-of-way used by custom, tradition or design primarily for travel by vehicles.

(t) WINTER ROAD shall be defined as a public right-of-way which shall be open and maintained by the Town from November 15th through April 1st for plowing and sanding only.

Section 4. MINIMUM ROAD STANDARDS

4.1 The Selectman have adopted this section for the expressed purposed of minimizing any potential burden upon the Town or its residents which may result from the lay out or acceptance of highways or their use by members of the general public.

4.2 This Section shall apply to all roads developed, built, and constructed in the Town Of Alton, to include any existing highway for which Town ownership, maintenance or acceptance is applied for.

4.3 These standards consist of the established minimum acceptance criteria for roads constructed in the Town Of Alton. However, nothing in this section shall be construed to prevent any road developer or builder from employing construction techniques, materials, etc.... which exceed these minimum standards.

4.4 The minimum width of a right of way shall be a consistent fifty feet (50') rights of way shall be established by deed of title or easement.

4.5 Road intersections shall be ninety degrees (90) whenever possible (measured from centerline to centerline). Under no circumstances shall an intersection be constructed at a horizontal curve angle of less than sixty degrees (60). Intersection grades shall not exceed two percent (2%) for a distance of fifty feet (50')when measured from the edge of pavement to the centerline of the traveled way.

4.6 The limits of the right of way shall be delineated using permanent markers at all points of curvature, tangency or angle points located along the boundaries of the right of way. The Road Agent may also require additional markers as he / she may deem necessary. As-built locations to included marker elevations shall be shown on a plan or plat which is stamped by a licensed land surveyor.

4.7 Curve radii along the limits of a right of way and traveled way at street intersections shall be twenty -five feet (25). Curve radii at all other locations shall conform to AASHTO design criteria. Sight distances at horizontal and vertical intersection locations shall also conform to AASHTO standards.

4.8 Road Grades shall not be less than one -half of one percent (0.5%) nor greater than eight percent (8°I0)

4.9 The Minimum design speed shall be thirty miles per hour (30) whenever possible, other wise twenty-five miles per hour (25) may be allowed under extenuating circumstances. A New Hampshire Registered Professional Engineer shall certify and specify the minimum design standard which has been met. Plans shall be stamped accordingly.

4.10 The recommended slope of earth or soil embankments shall be 4:1 (horizontal to vertical ratio). However, the maximum slope ratio shall be allowed at 2:1 upon certification by a New Hampshire Registered Professional Engineer of stable ledge being present or adequate reinforcements or detainments which have been designed and constructed in accordance with AASHTO design criteria.

4.11 Road shoulders shall be a minimum width of two feet (2) where no closed drainage and side walk exists and shall be located on both edges of the traveled way. Shoulder slopes shall match the traveled way (2%). Construction shall match roadway sub-surface requirements. Drop-offs beyond the edge of shoulder should be constructed at a 4:1 slope. All drop-offs beyond the shoulder or drainage swales which exceed a 3:1 slope must have guardrails installed. Drawings of road plans shall be submitted which depict cross-sections of typical shoulders and ditch lines.

4.12 Traveled way cross slopes typically be two percent (2 %) or " per foot from the center line to edge of pavement. Super elevations along horizontal curves shall conform to AASHTO standards.

4.13 All traveled way surfaces shall be constructed of bituminous pavement, to consist of a binder course (NH DOT Type B) with a minimum compacted thickness of two inch (2"). and a surface course (NH DOT Type E) with a minimum compacted thickness of one inch (I") The minimum width of the traveled way (pavement) shall be twenty feet (20') If the roadway is expected to carry more than 400 vehicles per day, the Planning Board may require a wider traveled way and /or shoulders

4.14 All Roadway sub-surfaces including the gravel shoulders, shall be constructed to consist of a bank run gravel bottom layer (NHDOT 304.2) with a minimum compacted thickness of twelve inches (12") and crushed gravel (NH DOT 304.3) top layer with a minimum compacted thickness of six inches (6").All materials shall meet NHDOT specifications. If the roadway is expected to carry more than 400 vehicles per day, the Planning Board may increase the thickness of the gravel and / or crushed gravel layers. Any sub-surface running water shall be either diverted outside of the traveled way or contained to prevent undermining of the road base. Drawings of road plans shall be submitted which depict cross-sections of typical road base and surface specifications.

4.15 All wetland crossings shall be approved by the New Hampshire Wetlands Board or any similar State agency with jurisdiction prior to construction

4.16 All bridges shall be designed to withstand a minimum of H-20 loading and shall conform to AS SHTO standards with a minimum travel width of twenty-four feet (24') and guardrails along the entire length of both sides to extend fifty feet (50) beyond the bridge in both directions whenever possible.

4.17 All guard rails shall be constructed of materials in accordance with NHDOT specifications, and at least one railing shall be installed at a height with a maximum rail elevation which is thirty inches (30") above the finish grade.

4.18 All surface water, whether natural flow or a result of surface run-off, which enters upon a right-of-way shall be, divert from the traveled way by open ditches or closed drainage systems which have been designed by a New Hampshire Registered Professional Engineer. Culverts shall consist of pipes made of smooth bore polyethylene, ductile iron or reinforced concrete. All pipe connections shall be sealed in accordance with specifications as set forth by the manufacturer. The minimum diameter shall be fifteen inches (15") The minimum amount of cover shall be three feet (3'). Back fill shall be granular material to be installed in accordance with NH DOT specifications.

Permits shall be required for all natural flow water crossings from the NHDESWetlands Bureau as applicable. Deeded drainage easements shall be required for all water outlets onto private property. Locations and sizes of all drainage devices shall be determined using standard hydraulic design methods based upon calculations for a twenty -five (25) year storm event.

Manhole and catch basin grates shall be designed to conform to surface grades and must be removable for maintenance and safe for travel by bicycles. Additionally, all roads and drainage devices shall be constructed in such a manner as to ensure the maximum ground water level is at least twenty-four inches (24") below the sub grade surface.

Access for a rubber tired backhoe shall be provided to all drainage structures to be maintained including detention ponds and outlets, culverts and swales. Access shall be via a 10-ft wide minimum grass access road, at a grade no steeper than 10% with an easement at least 20-ft wide granting access to the party required to maintain the features

4.19 Erosion shall be controlled at all times (but especially during construction) in accordance with the " Erosion and Sediment Control Design Handbook for Developing Areas in New Hampshire" prepared by the USDA Natural Resources Conservation Service (formerly the Soil Conservation Service). Drainage slopes which exceed a five percent (5%) grade shall require permanent erosion control mechanisms which have been designed by a New Hampshire Registered Professional Engineer.

4.20 The Town shall require all designs and roadway plans to be stamped by a New Hampshire Registered Professional Engineer. The Road Agent or his/her designee shall then verify the plans meet these minimum standards. Upon completion of construction, as-built plans shall also be required with a PE Stamp. The Road Agent or his/her designee shall then verify the as-built plans conform with existing site conditions.

4.21 All road plans shall also be submitted to the Police Chief and Fire Chief for an evaluation of safety factors. Each Chief shall identify hazards and indicate locations for signs, marking or other safety devices as they deem necessary. Upon completion of construction, each Chief shall verify in writing that all safety concerns have been addressed in an acceptable manner.

4.22 A minimum of five feet (5') wide sidewalk shall be required within a right-ofway, but located outside of the limits of the traveled way and drainage areas on each side of the road whenever a project is a proposed housing development if the planned density average is in excess of one dwelling per hundred feet of road frontage and there are a total of more than twenty-five (25) dwellings which abut the proposed roadway. Sidewalk construction shall require a minimum subsurface base of twelve inches of crushed gravel (NHDOT 304.3) Surface materials shall be either two inches (2") compacted bituminous pavement (NHDOT Type F) or six inch (6") thick reinforced concrete. All materials shall conform to NHDOT specifications. Sidewalk designs shall conform to standards set forth under the Americans with Disabilities Act and shall include provisions for snow removal operations which are satisfactory to the Road Agent.

4.23 All utility devices shall be installed within the right of way but, at least six feet (6') beyond the edge of the traveled way and drainage areas. All poles, conduits and pipes shall require deeded easements to describe their exact locations.

4.24 Dead end roads shall not be permitting to exceed two thousand five hundred feet (2,500') in length to a single point of access. This distance shall be measured from the end of the terminus to the nearest intersection with a dual egress street. All dead end roads shall be constructed with a minimum pavement width of twenty (20') in their entirety. Terminus shall be either a cul-de-sac with a minimum travel way radius of forty feet (40), or a hammerhead with a minimum travel way radius of sixty -two feet (62').

4.25 All testing shall be completed by a qualified third party, paid for by the applicant. Testing for gradation for all materials used in roadway, sidewalk and drainage construction shall be tested at a frequency of every 500-cubic yards. Data from a minimum of two (2) samples shall be submitted prior to delivery. Materials not meeting the gradation requirements shall not be placed on the road All test results shall be submitted to the Alton Road Agent or his/her appointed designee.

Testing for density for all materials used in roadway, sidewalk and drainage construction shall be tested at a frequency of every 500-cubic yards per ASTM D1557 Modified Proctor Method. In-place density shall be tested in accordance with ASTM D2922, ASTM D1556 or by other methods as approved by the Alton Road Agent or his /her appointed designee. In-place density testing shall be completed at a frequency of 3 test per 500-linear feet per lift. The minimum compaction rate shall be ninety three percent (93%) of the maximum density of the material as determined by ASTM D1557 Modified Proctor. Materials not meeting the compaction requirements shall be re-compacted to meet the requirements stated herein prior to the release of securities.

4.26 Driveways shall be constructed to ensure the structural integrity of the edge of pavement is maintained to provide for drainage which will prevent water run off from entering upon the travel way. Every dwelling and lot must be provided with a means of access which is located solely on that property. All connections to existing Town Highways shall conform with the provisions of Section 7

4.27 The Selectman shall approve all street names giving due consideration to the request of the builder, developer or residents. The Selectman shall not approve any name which already exists or which in their opinion may be so similar to an existing name as to cause confusion during an emergency response situation.

4.28 The Code Official for the Town of Alton shall provide all dwellings with an address prior to a Certificate of Occupancy Permit being issued. Address numbers are to be displayed in a visible location and in accordance with written Town Address Regulations.

4.29 Nothing in these Policies and Regulations shall be constructed to limit the ability of the Planning Board to allow construction of a road which does not meet the minimum road standards for small-scale subdivisions, accordance with Planning Board regulations. However, it must be expressly understood that such roads shall not be eligible to become Town owned or Town maintained until such time as the road does meet the minimum road standards which are in effect at the time a highway layout or street acceptance is applied for. The Selectman strongly recommend that the Planning Board have this condition noted and stamped on approved plans whenever such allowance is granted.

4.30 Construction of roads sidewalks, and drainage features shall conform to the details provided in the Appendices of these Policies and Regulations. These details shall be included in the plan sets as applicable.

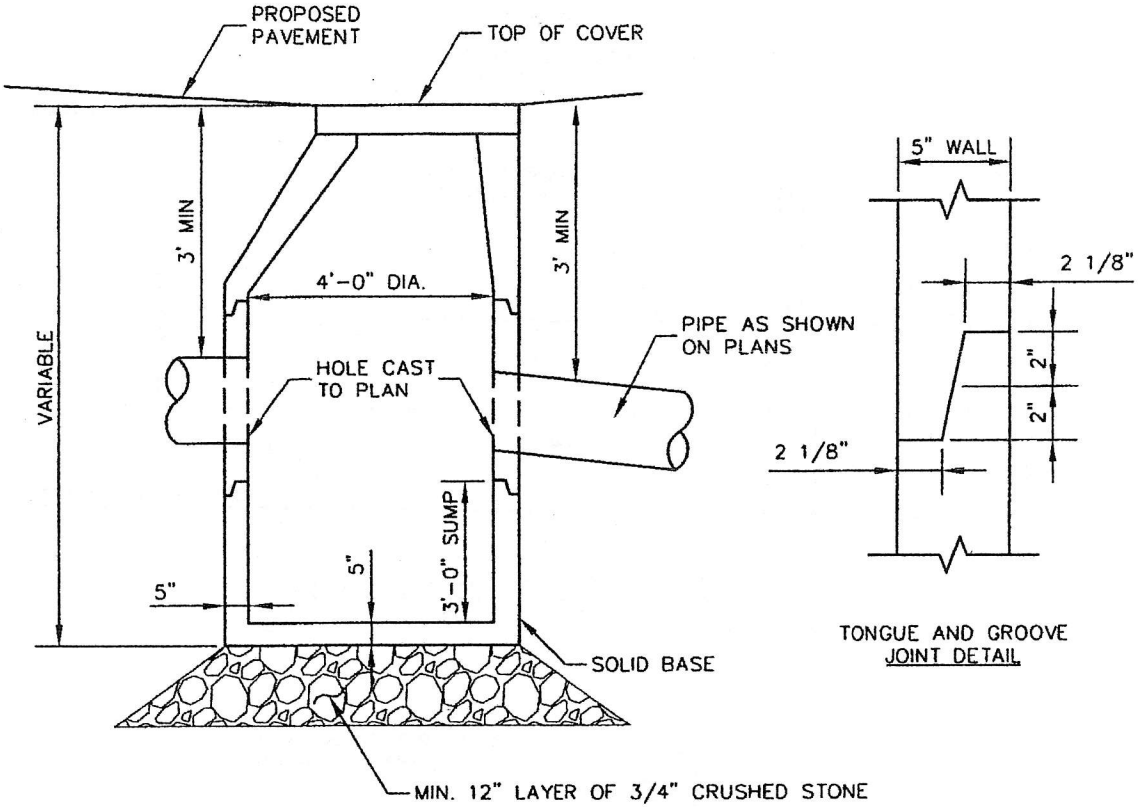

NOTES:

1) HORIZONTAL JOINTS BETWEEN SECTIONS OF PRECAST CONCRETE BARRELS SHALL BE OF A TYPE APPROVED BY THE ENGINEER, WHICH SHALL, IN GENERAL, DEPEND ON WATER TIGHTNESS UPON AN ELASTOMERIC OR MASTIC-LIKE GASKET.

2) PIPE TO MANHOLE JOINTS SHALL BE ONLY AS APPROVED BY THE ENGINEER AND IN GENERAL WILL DEPEND ON WATER TIGHTNESS UPON EITHER AN APPROVED NON-SHRINKING MORTAR OR ELASTOMERIC SEALANT.

3) FOR BITUMASTIC TYPE JOINTS, THE AMOUNT OF SEALANT SHALL BE SUFFICIENT TO FILL AT LEAST 75% OF THE JOINT CAVITY. APPROVED BITUMASTIC SEALANTS INCLUDE RAM-NEK, KENT SEAL NO. 2, EZ OR EQUAL.

4) ALL STRUCTURES SHALL MEET H-20 LOADING.

5) THE TONGUE OR THE GROOVE OF THE JOINT OF THE WALL. SHALL CONTAIN ONE LINE OF CIRCUMFERENTIAL REINFORCEMENT EQUAL TO 0.12 SQ.IN. PER LINEAR FOOT.

6) ECCENTRIC CONES SHALL BE USED WHEN DEPTH TO CROWN OF SHALLOWEST PIPE EXCEEDS 30". RISERS OF 12", 3' AND 4' CAN BE USED TO REACH THE DESIRED DEPTH.

7) CATCH BASIN GRATES TO BE NHDOT TYPE B CAST IRON

ALTON HIGHWAY DEPARTMENT
80 Letter S Road
Alton New Hampshire 03809
Phone: 603-875-6808
Fax: 603-875-6809

E-mail: altonhighway@metrocast.net

Figure 1:
Catch Basin
Town of Alton, NH
Standard Details

Not to Scale

FEBRUARY 5th 2007

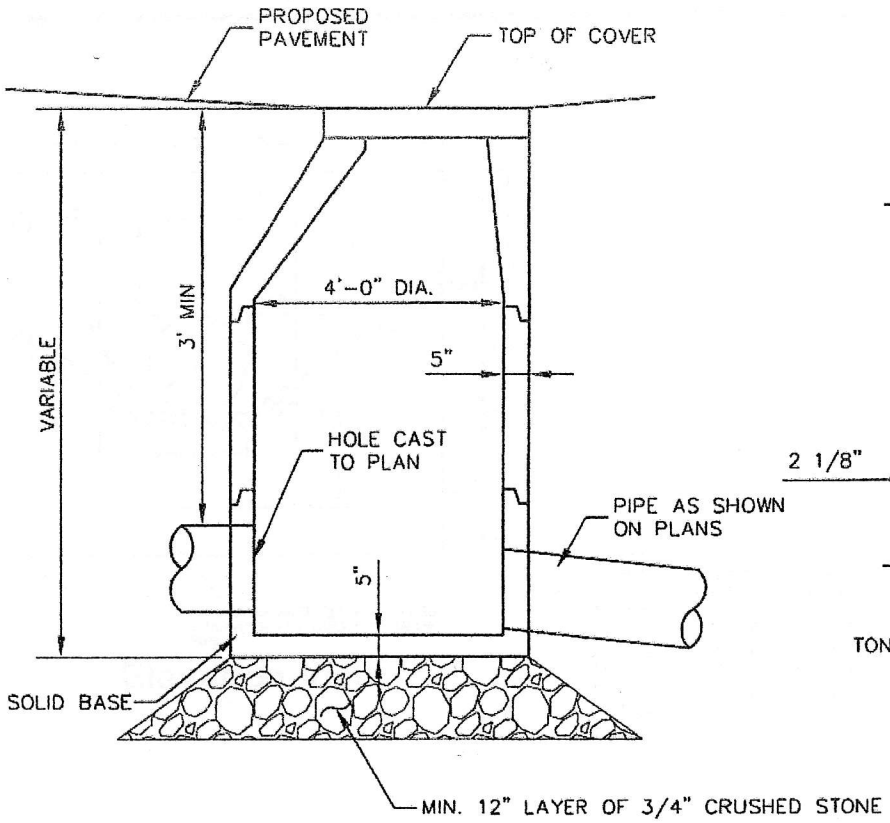

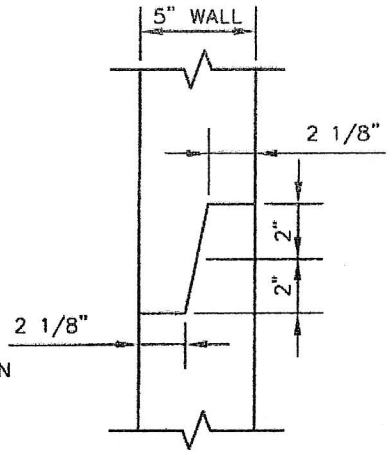

TONGUE AND GROOVE JOINT DETAIL

NOTES:

t) HORIZONTAL JOINTS BETWEEN SECTIONS OF PRECAST CONCRETE BARRELS SHALL BE OF A TYPE APPROVED BY THE ENGINEER, WHICH SHALL, IN GENERAL, DEPEND ON WATER TIGHTNESS UPON AN ELASTOMERIC OR MASTIC-LIKE GASKET.

2) PIPE TO MANHOLE JOINTS SHALL BE ONLY AS APPROVED BY THE ENGINEER AND IN GENERAL WILL DEPEND ON WATER TIGHTNESS UPON EITHER AN APPROVED NON-SHRINKING MORTAR OR ELASTOMERIC SEALANT.

3) FOR BITUMASTIC TYPE JOINTS, THE AMOUNT OF SEALANT SHALL BE SUFFICIENT TO FILL AT LEAST 75% OF THE JOINT CAVITY. APPROVED BITUMASTIC SEALANTS INCLUDE RAM-NEK, KENT SEAL NO. 2, EZ OR EQUAL.

4) ALL STRUCTURES SHALL MEET H-20 LOADING.

5) THE TONGUE OR THE GROOVE OF THE JOINT OF THE WALL. SHALL CONTAIN ONE LINE OF CIRCUMFERENTIAL REINFORCEMENT EQUAL TO 0.12 SO.IN, PER LINEAR FOOT.

6) ECCENTRIC CONES SHALL BE USED WHEN DEPTH TO CROWN OF SHALLOWEST PIPE EXCEEDS 30". RISERS OF 12", 3' AND 4' CAN BE USED TO REACH THE DESIRED DEPTH.

7) DRAIN MANHOLE COVERS SHALL BE CONSTRUCTED OF CAST IRON & LABELED "DRAIN"

ALTON HIGHWAY DEPARTMENT
80 Letter S Road
Alton New Hampshire 03809
Phone: 603-875-6808
Fax: 603-875-6809

E-mail: altonhighway@metrocast.net

Figure 2:
Stormwater Manhole
Town of Alton, NH
Standard Details

FEBRUARY 5th 2007

Not to Scale

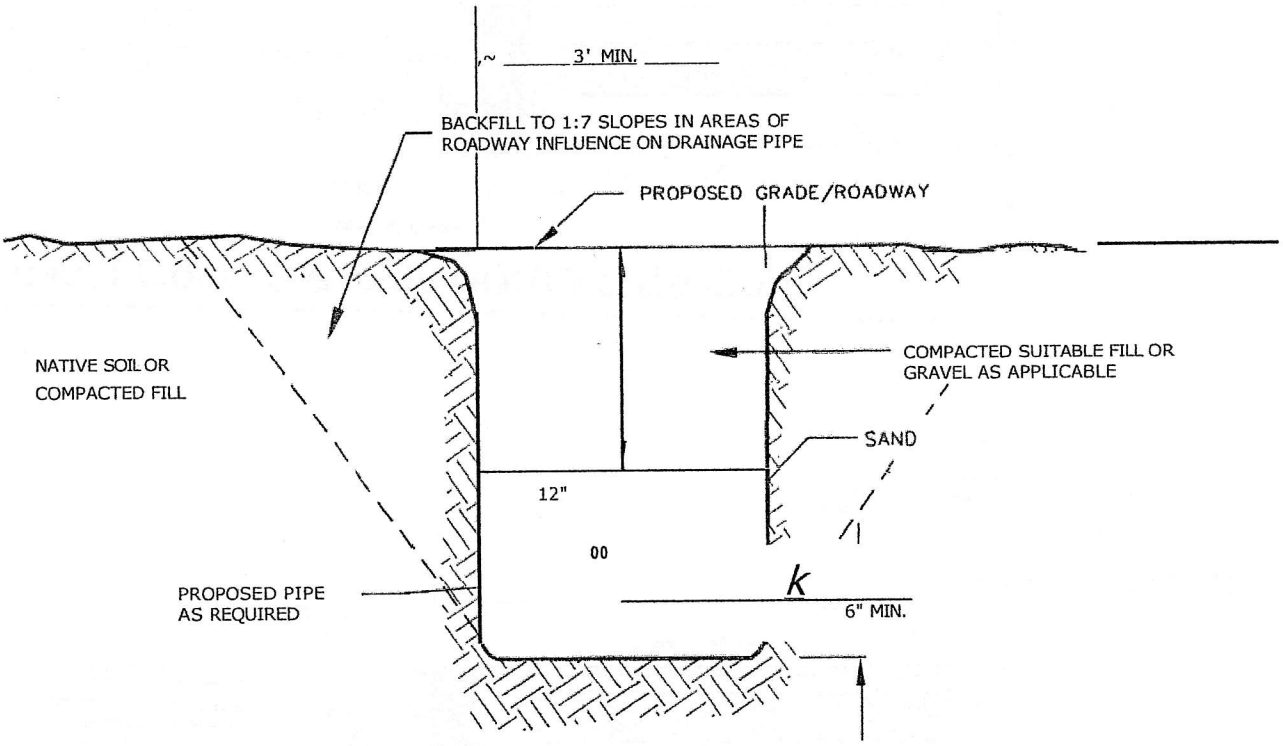

ALTON HIGHWAY DEPARTMENT
80 Letter S Road
Alton New Hampshire 03809
Phone: 603-875-6808
Fax: 603-875-6809

E-mail: altonhighway@metrocast.net

Figure 3:
Drainage Pipe Bedding
Town of Alton, NH
Standard Details

Not to Scale

FEBRUARY 5th 2007

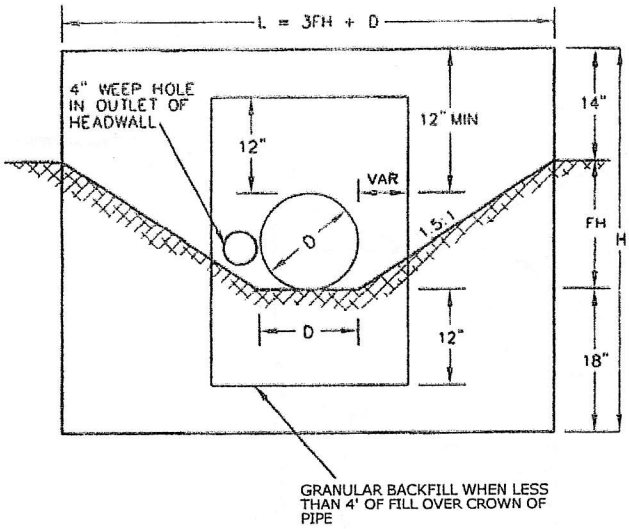

Elevation View

DIAMETER 0 INCHES	HEADWALL LENGTH L	HEADWALL HEIGHT H	FILL HEIGHT FH	WIDTH AT BOTTOM W
15	4'-6"	3'_9"	t'-t"	2'-0"
18	5'-6"	4'-0"	1'-4"	2'-0"
24	7'-6"	4'-6"	t'-70"	2'-2"
30	9'-6"	5'-0"	2'-a"	2'-3"
36			~2- 10" ~	2'-S"

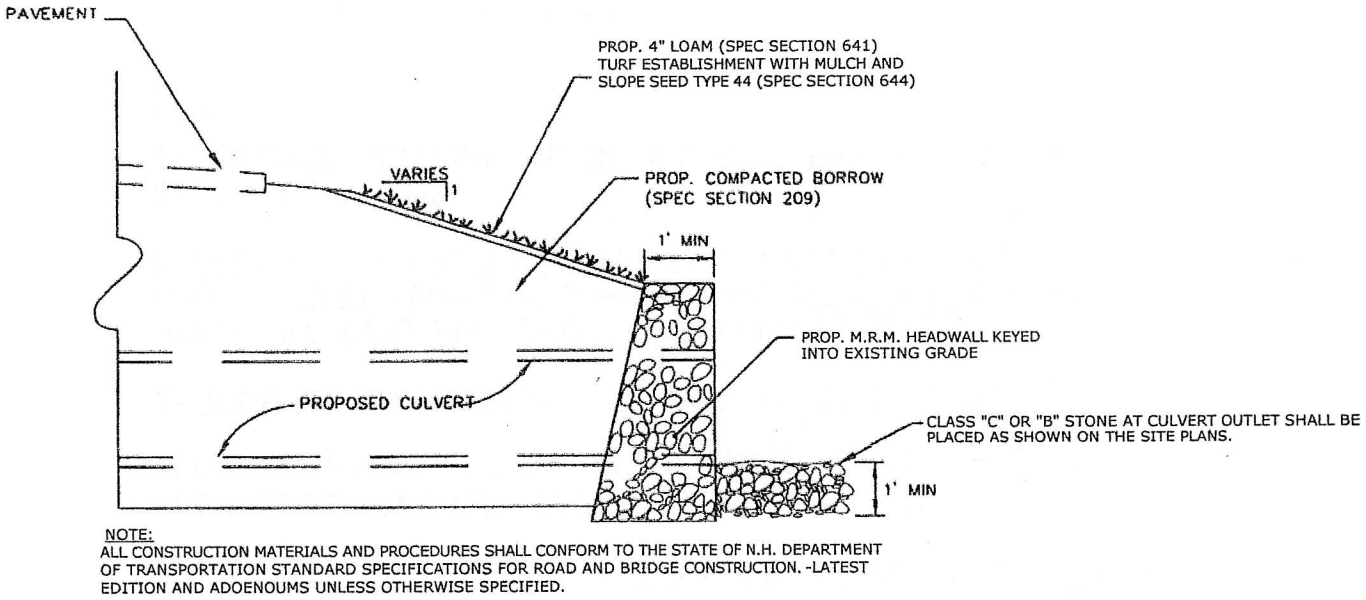

NOTE:
ALL CONSTRUCTION MATERIALS AND PROCEDURES SHALL CONFORM TO THE STATE OF N.H. DEPARTMENT OF TRANSPORTATION STANDARD SPECIFICATIONS FOR ROAD AND BRIDGE CONSTRUCTION. -LATEST EDITION AND ADOENOUMS UNLESS OTHERWISE SPECIFIED.

Section View

ALTON HIGHWAY DEPARTMENT
80 Letter S Road
Alton New Hampshire 03809
Phone: 603-875-6808
Fax: 603-875-6809

E-mail: altonhighway@metrocast.net

Figure 4:
Headwall
Town of Alton, NH
Standard Details

Not to Scale

FEBRUARY 5th 2007

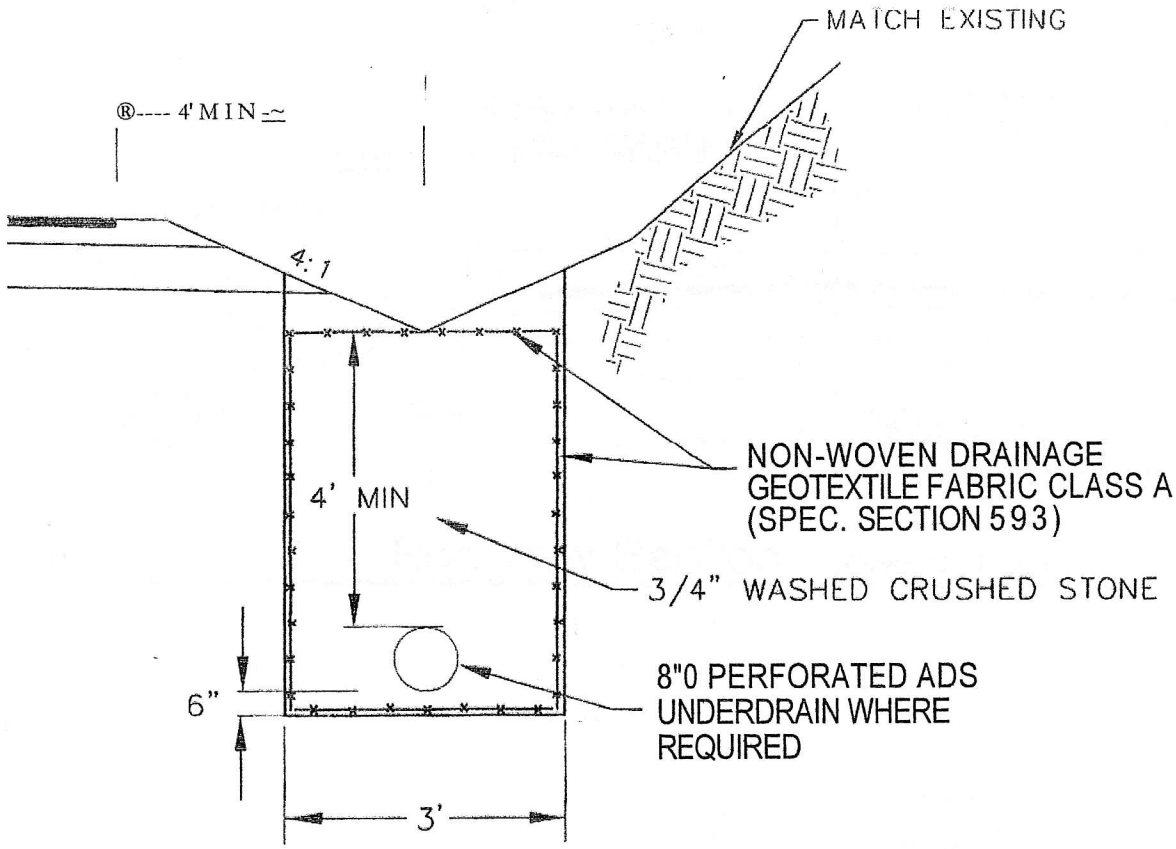

NOTE:

1) GRADING FOR UNDERDRAIN PIPE SHALL BE PARALLEL TO GRADE OF THE ROAD.

2) UNDERDRAIN OUTLET SHALL ENTER A CATCH BASIN OR BE PROTECTED BY A MASONRY RUBBLE HEADWALL. WHEN ENTERING A HEADWALL, LAST 10-LF SHALL BE SOLID UNDERDRAIN.

3) UNDERDRAIN CROSSING THE ROAD SHALL BE SOLID.

4) UNDERDRAIN FLUSHING BASINS SHALL BE INSTALLED AT THE END OF RUNS AND APPROXIMATELY EVERY 300'.

5) TOP OF UNDERDRAIN PIPE SHALL BE BURIED A MINIMUM OF 4'.

ALTON HIGHWAY DEPARTMENT
80 Letter S Road
Alton New Hampshire 03809
Phone: 603-875-6808
Fax: 603-875-6809

E-mail: altonhighway@metrocast.net

Figure 5:
Underdrain
Town of Alton, NH
Standard Details

FEBRUARY 5th 2007

Not to Scale

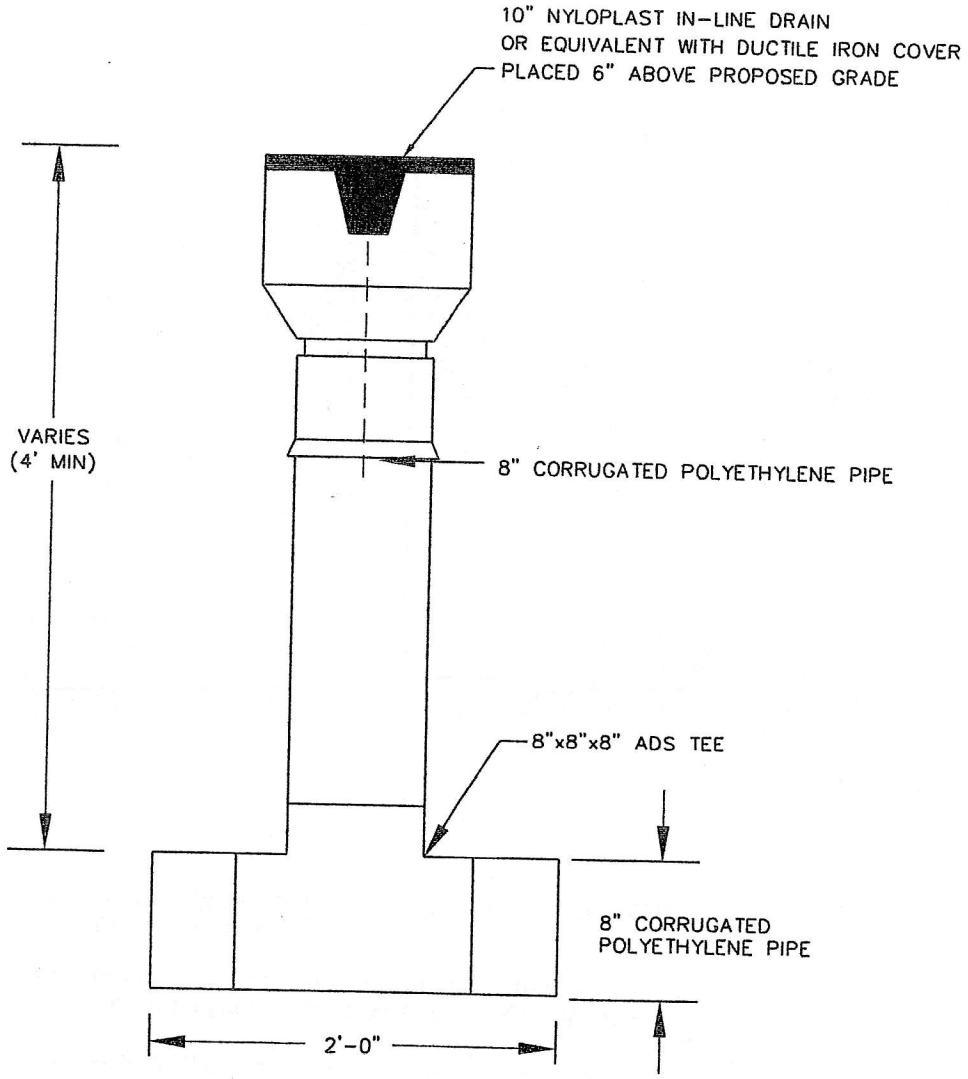

ALTON HIGHWAY DEPARTMENT
80 Letter S Road
Alton New Hampshire 03809
Phone: 603-875-6808
Fax: 603-875-6809

E-mail: altonhighway@metrocast.net

Figure 6:
Underdrain Flushing Basin
Town of Alton, NH
Standard Details

FEBRUARY 5th 2007

Not to Scale

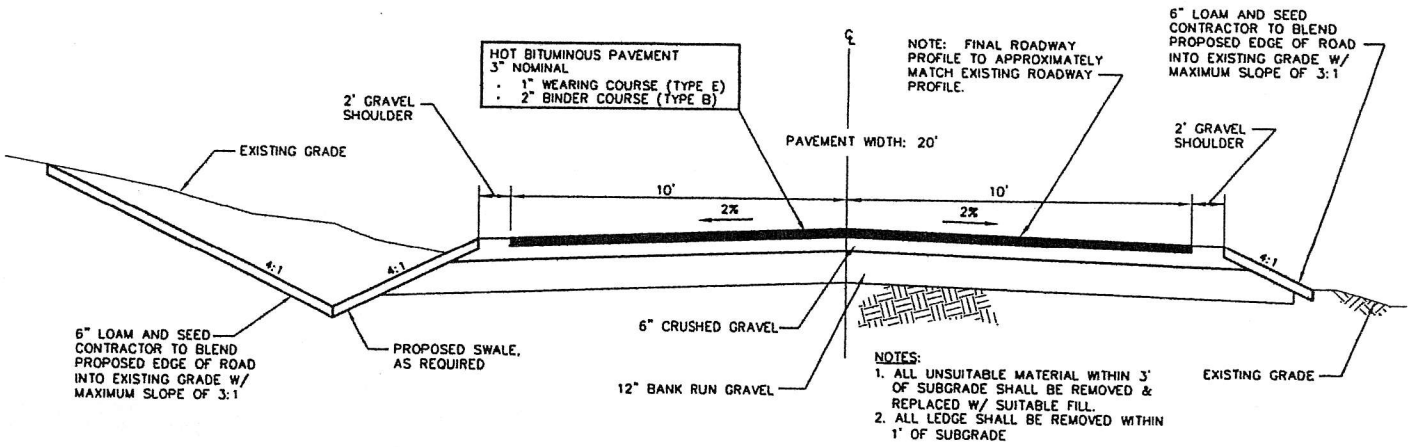

Roadway Section (Open Drainage)

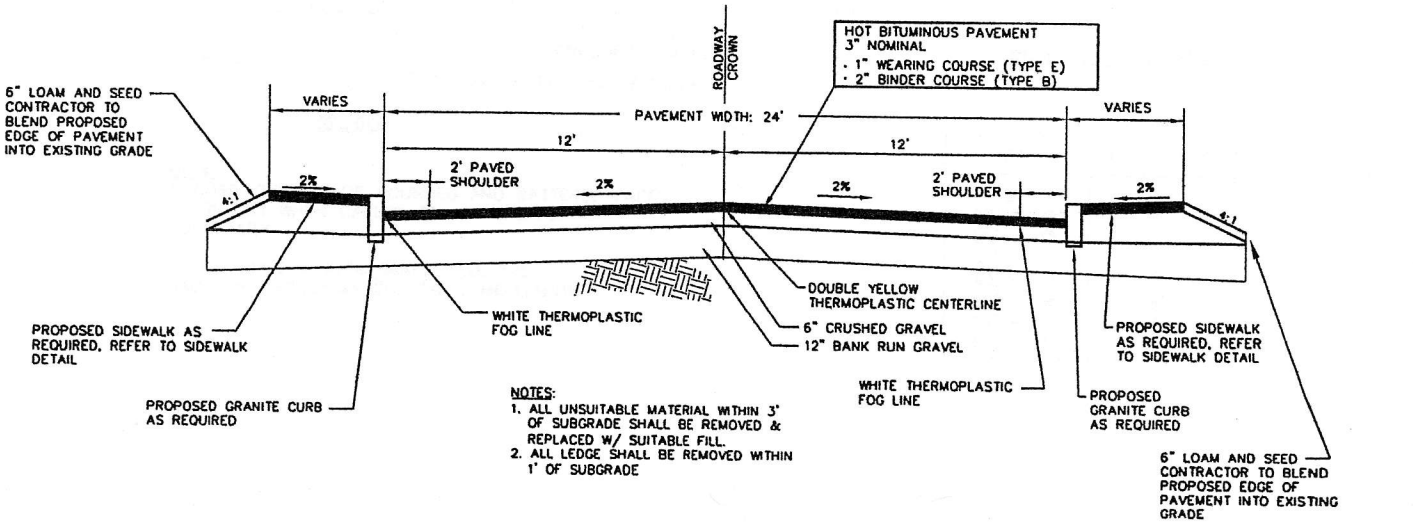

Roadway Section (Sidewalk and Closed Drainage)

ALTON HIGHWAY DEPARTMENT
80 Letter S Road
Alton New Hampshire 03809
Phone: 603-875-6808
Fax: 603-875-6809

E-mail: altonhighway@metrocast.net

Figure 7:
Standard Roadway Cross Section
Town of Alton, NH
Standard Details

FEBRUARY 5th 2007

Not to Scale

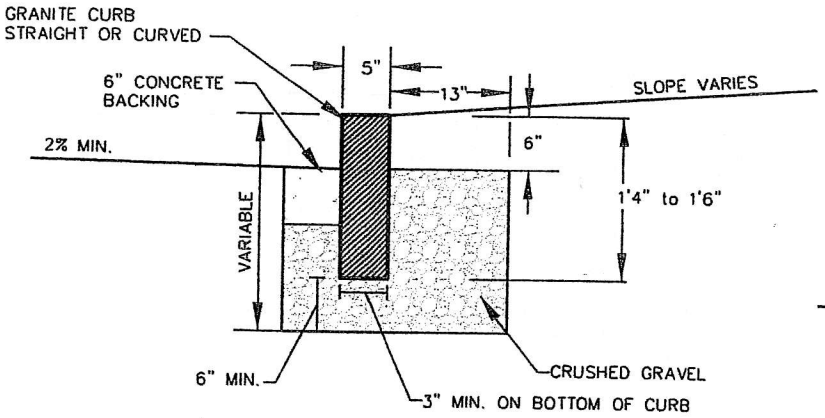

SECTION

MINIMUM LENGTH OF CURB STONES – 3'
MAXIMUM LENGTH OF CURB STONES – 10'
MAXIMUM LENGTH OF STRAIGHT CURB STONES
LAID ON CURVES – SEE CHART

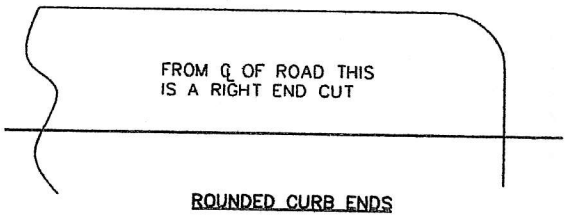

ROUNDED CURB ENDS

NOTE:
1. CURB ENDS TO BE ROUNDED AND BATTERED FACES TO BE CUT WHEN CALLED FOR ON THE PLANS, SUBSIDIARY.

2. ADJOINING STONES SHALL HAVE THE SAME OR APPROXIMATELY THE SAME LENGTH.

RADIUS	MAX. LENGTH
21'	3'
22' – 28'	4'
29' – 35'	5'
36' – 42'	6'
43' – 49'	7'
50' – 56'	8'
57' – 60'	9'
OVER 60'	10'

ALTON HIGHWAY DEPARTMENT
80 Letter S Road
Alton New Hampshire 03809
Phone: 603-875-6808
Fax: 603-875-6809

E-mail: altonhighway@metrocast.net

Figure 8: Curb

Town of Alton, NH Standard Details

FEBRUARY 5th 2007

Not to Scale

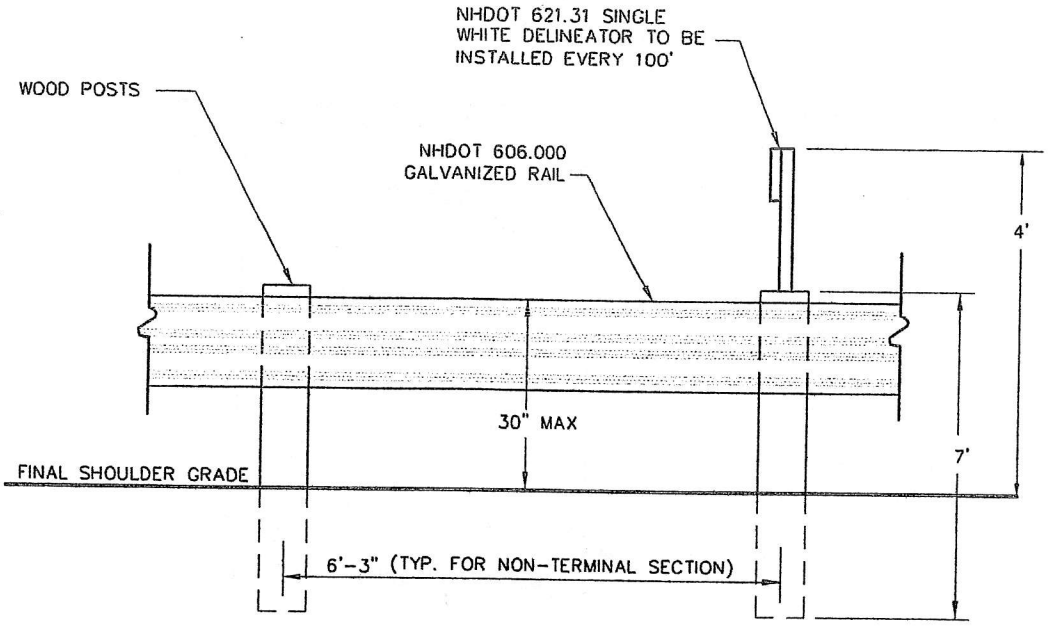

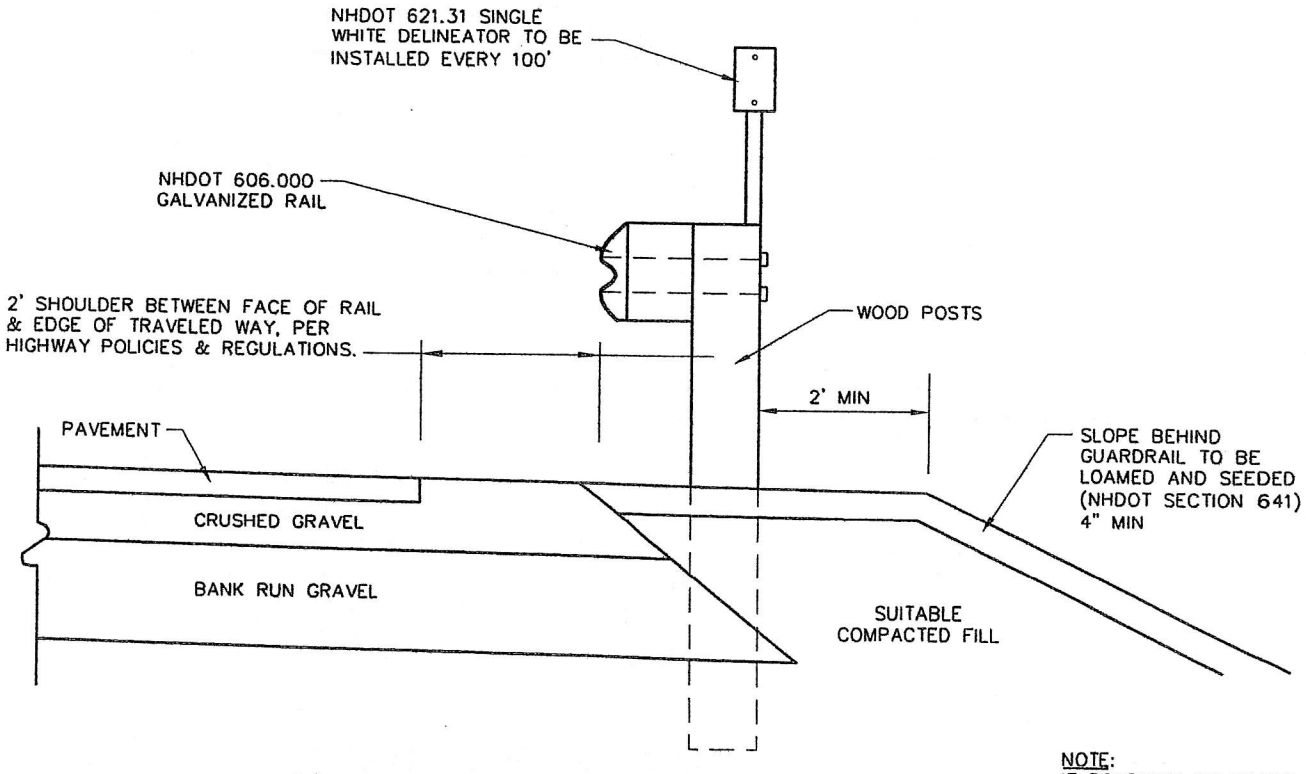

NOTE:
IF ROADWAY CONTAINS
CURB, GUARDRAIL FACE
TO MATCH CURB FACE

ALTON HIGHWAY DEPARTMENT
80 Letter S Road
Alton New Hampshire 03809
Phone: 603-875-6808
Fax: 603-875-6809

E-mail: altonhighway@metrocast.net

Figure 9: Guardrail

Town of Alton, NH Standard Details

FEBRUARY 5th 2007

Not to Scale

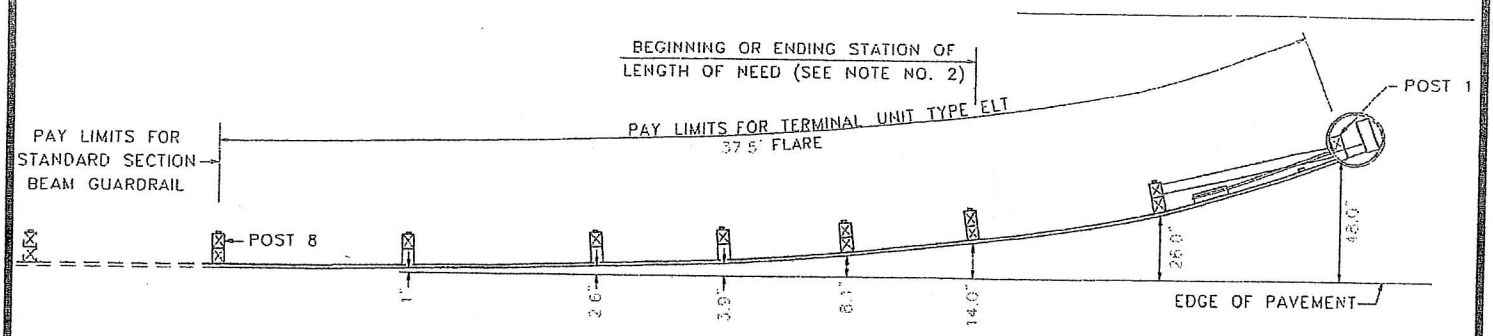

PLAN

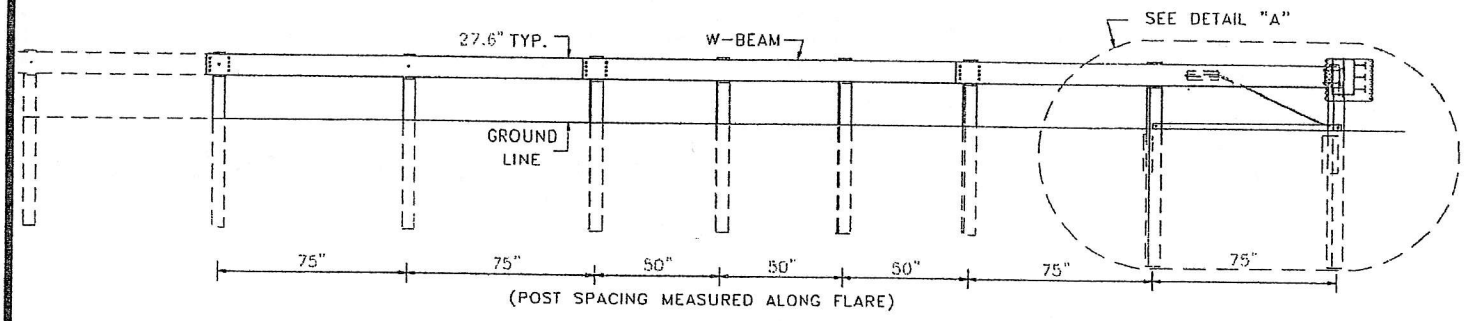

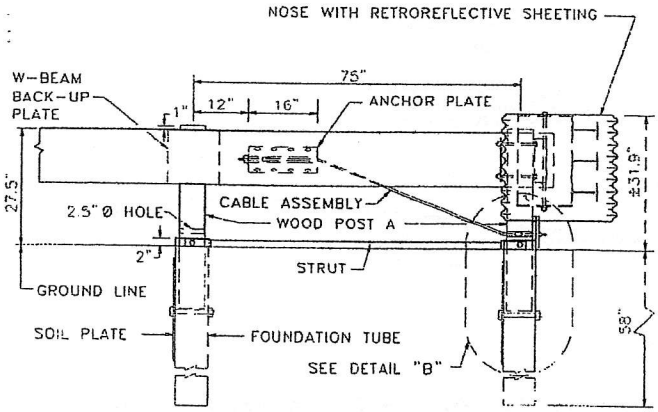

DETAIL "A"

GENERAL NOTES

1. THE CORRECT ASSEMBLY AND INSTALLATION OF THIS TERMINAL UNIT, INCLUDING THE LAYOUT OF THE 37.5' FLARE, IS IMPORTANT TO ITS PROPER PERFORMANCE
2. THE LENGTH OF NEED IS THE TOTAL LENGTH OF A LONGITUDINAL BARRIER NEEDED TO SHIELD AN AREA OF CONCERN. TO DETERMINE THE LENGTH OF NEED, REFER TO THE *ROADSIDE DESIGN GUIDE* – AASHTO, 1996.
3. THE AREA OUTSIDE AND DOWNSTREAM OF THE FIRST 12.5' (BREAKAWAY NOSE SECTION) OF THE ELT SHOULD BE REASONABLY TRAVERSABLE AND FREE OF FIXED-OBJECT HAZARDS TO THE EXTENT PRACTICAL. IF A CLEAR RUNOUT IS NOT ATTAINABLE, THIS AREA SHOULD AT LEAST BE SIMILAR IN CHARACTER TO UPSTREAM, UNSHIELDED ROADSIDE AREAS.
4. SEE NHDOT STANDARDS NO. GR-3B & GR-3C FOR ELT HARDWARE DETAILS. SEE STANDARD NO. GR-1 FOR ADDITIONAL DETAILS OF COMMON HARDWARE.
5. THIS TERMINAL SHALL BE INSTALLED USING THREE 150" LONG STRAIGHT SECTIONS OF W-BEAM RAIL THAT ARE FORCED AGAINST THE POSTS. SHOP-CURVED SECTIONS SHALL NOT BE USED. (THE SECOND SENTENCE OF 606.2.4.2 DOES NOT APPLY.)

ALTON HIGHWAY DEPARTMENT
80 Letter S Road
Alton New Hampshire 03809
Phone: 603-875-6808
Fax: 603-875-6809

E-mail: altonhighway@metrocast.net

Figure 10: Guardrail End Section

Town of Alton, NH Standard Details

FEBRUARY 5th 2007

Not to Scale

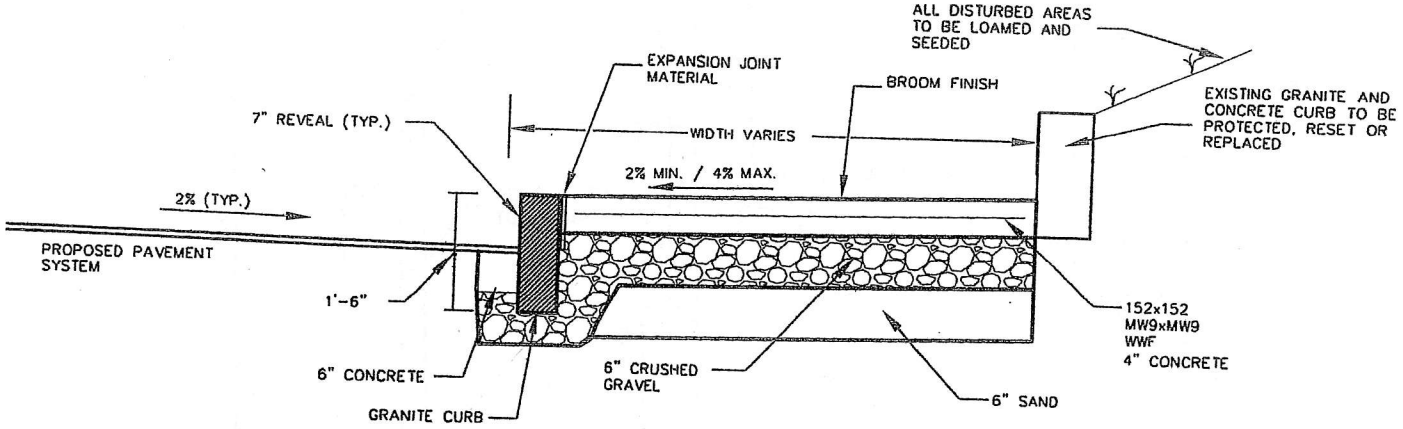

Typical Concrete Sidewalk/Granite Curb

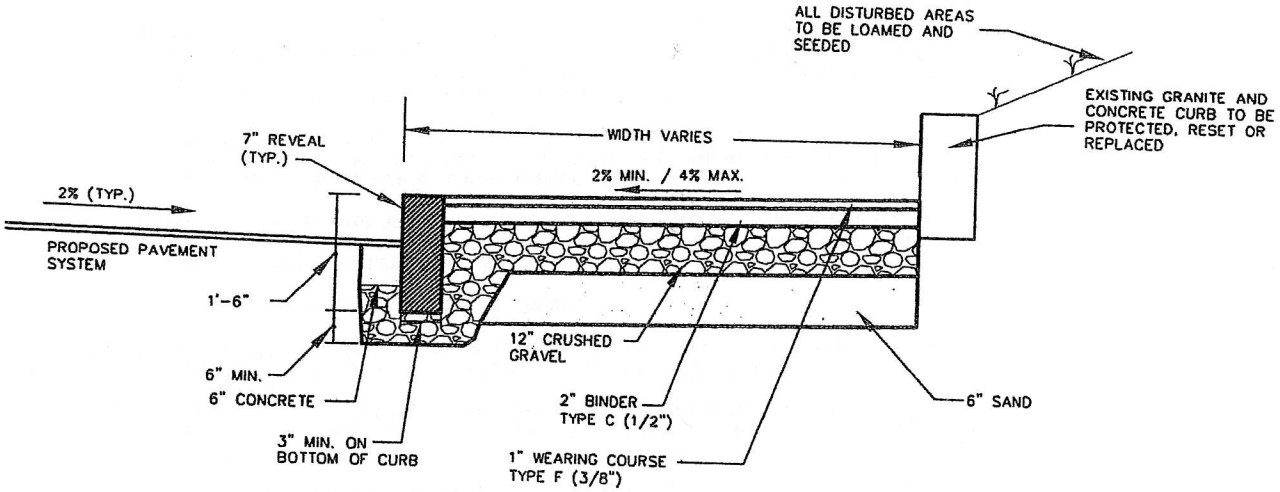

Typical Bituminous Sidewalk/Granite Curb

ALTON HIGHWAY DEPARTMENT
80 Letter S Road
Alton New Hampshire 03809
Phone: 603-875-6808
Fax: 603-875-6809

E-mail: altonhighway@metrocast.net

Figure 11: Sidewalk

Town of Alton, NH Standard Details

FEBRUARY 5th 2007

Not to Scale

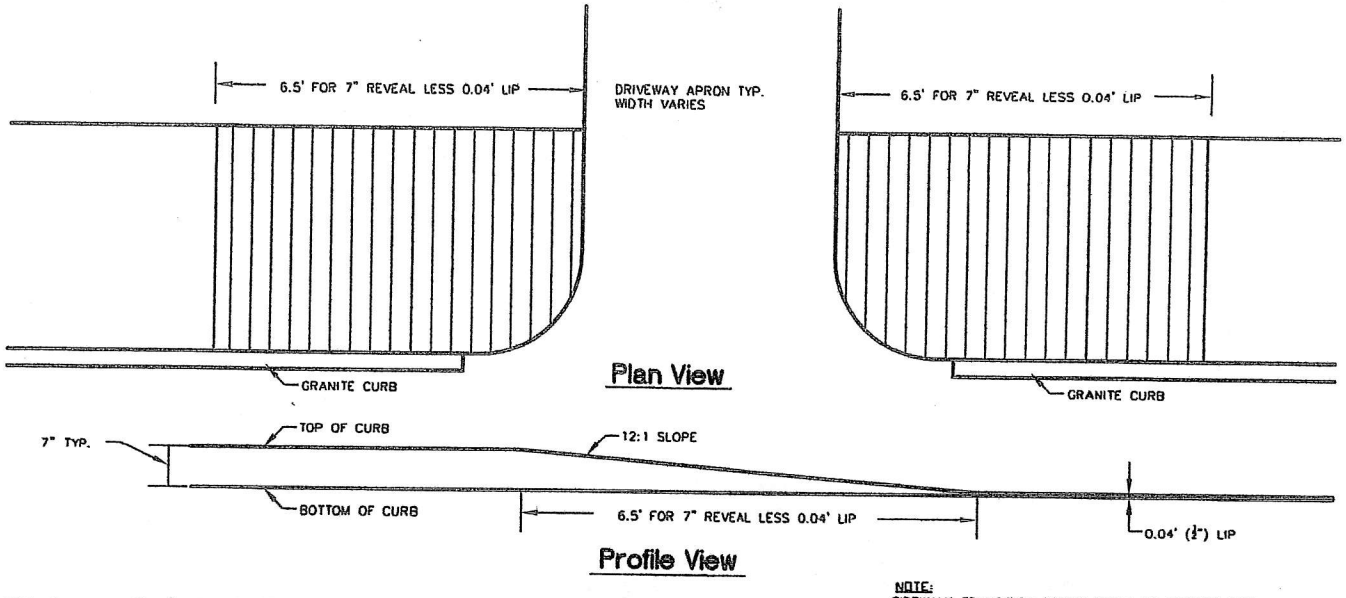

Sidewalk/Curb Transition Ramp

NOTE:
SIDEWALK TRANSITION RAMPS SHALL BE CONSTRUCTED AT THE INTERSECTIONS OF ALL DRIVEWAY APRONS AS WELL AS AT THE ENDS OF PROPOSED SIDEWALKS.

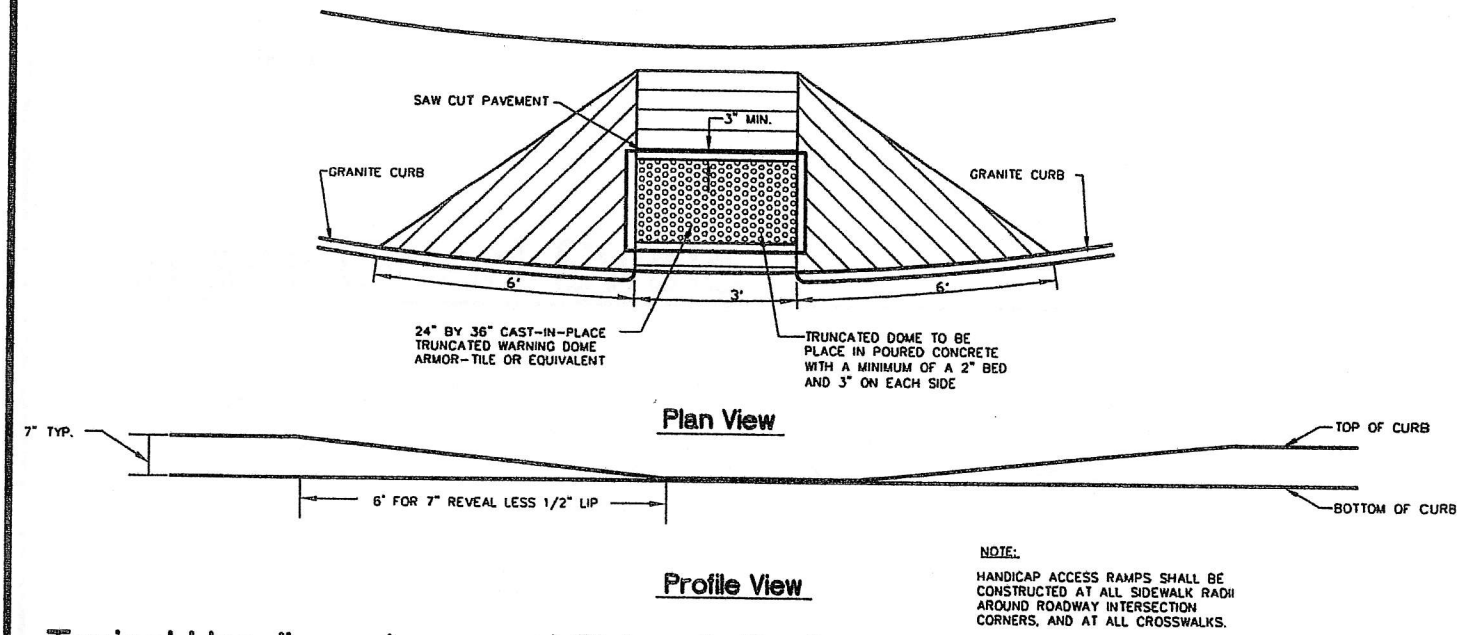

NOTE:
HANDICAP ACCESS RAMPS SHALL BE CONSTRUCTED AT ALL SIDEWALK RADII AROUND ROADWAY INTERSECTION CORNERS, AND AT ALL CROSSWALKS.

Typical Handicap Access at Sidewalk Radius

ALTON HIGHWAY DEPARTMENT
80 Letter S Road
Alton New Hampshire 03809
Phone: 603-875-6808
Fax: 603-875-6809

E-mail: altonhighway@metrocast.net

Figure 12: Sidewalk Handicap Access

Town of Alton, NH Standard Details

FEBRUARY 5th 2007

Not to Scale

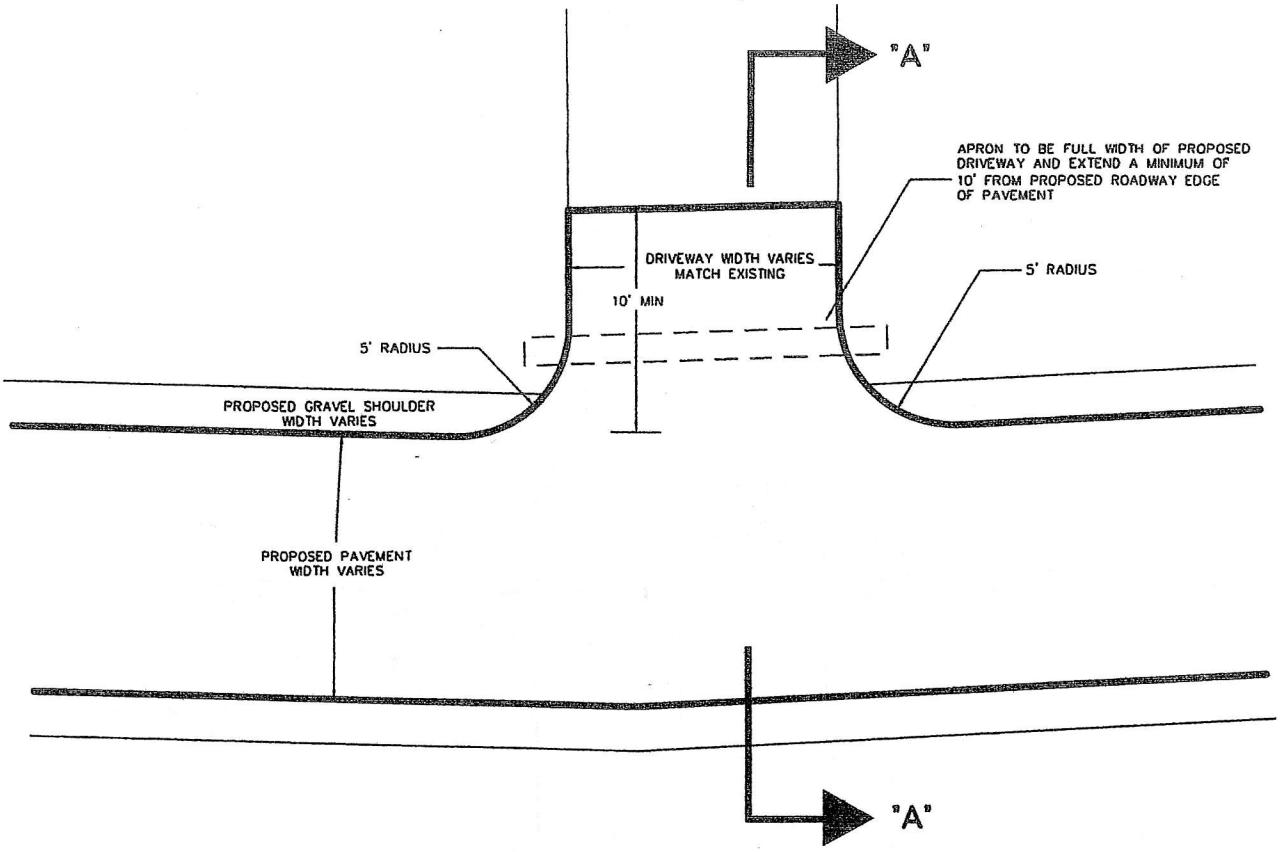

Typical Driveway Apron

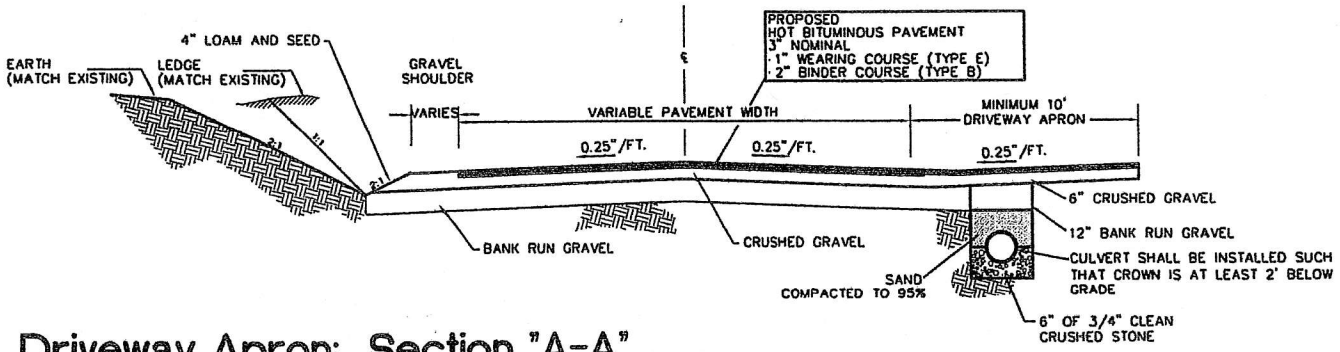

Driveway Apron: Section "A-A"

ALTON HIGHWAY DEPARTMENT
80 Letter S Road
Alton New Hampshire 03809
Phone: 603-875-6808
Fax: 603-875-6809

E-mail: altonhighway@metrocast.net

Figure 13:
Driveway Apron
Town of Alton, NH
Standard Details

FEBRUARY 5th 2007

Not to Scale

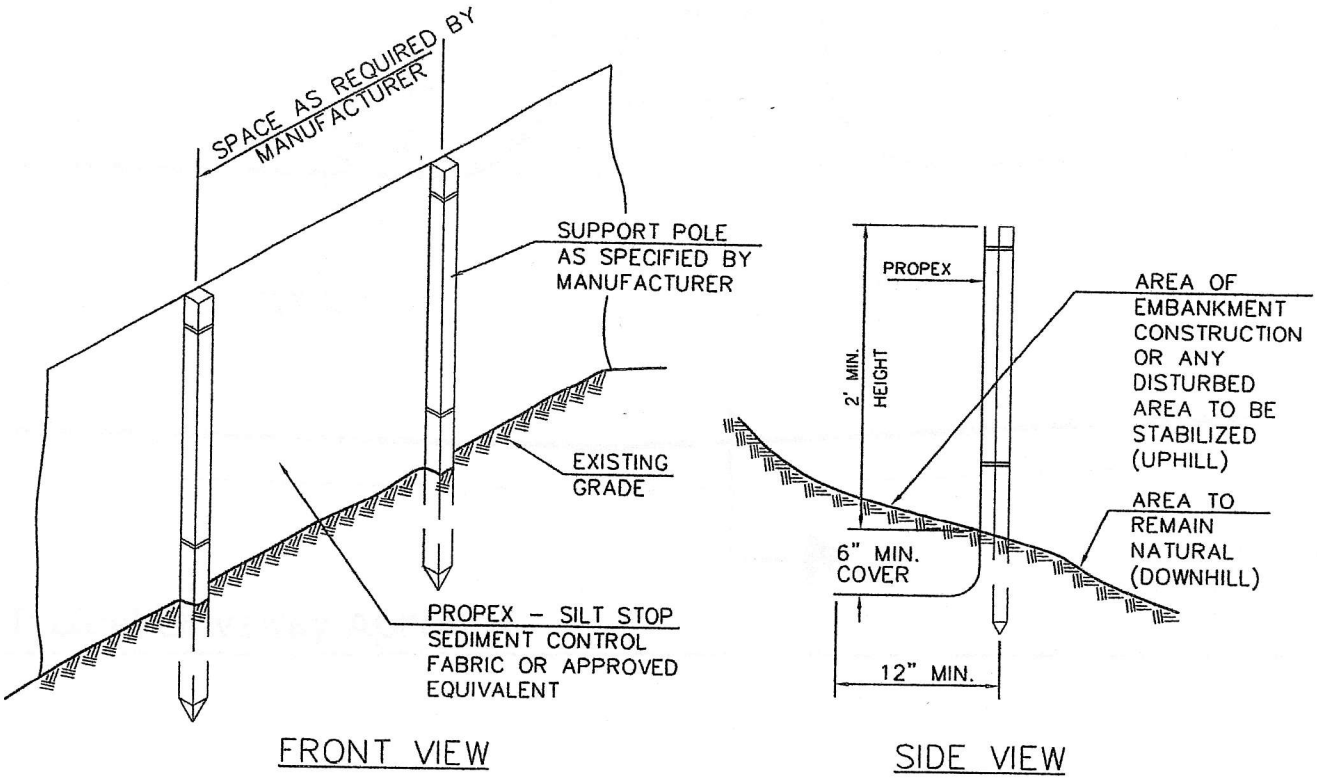

NOTE:
AT A MINIMUM, SILT FENCE IS TO BE INSTALLED TO PROTECT WETLAND AREAS, WATERWAYS, EXISTING AND PROPOSED DRAINAGE FEATURES, SLOPES, LAWNS AND PLANTINGS ADJACENT TO THE WORK.

ALTON HIGHWAY DEPARTMENT
80 Letter S Road
Alton New Hampshire 03809
Phone: 603-875-6808
Fax: 603-875-6809

E-mail: altonhighway@metrocast.net

Figure 14:
Silt Fence

Town of Alton, NH
Standard Details

FEBRUARY 5th 2007

Not to Scale

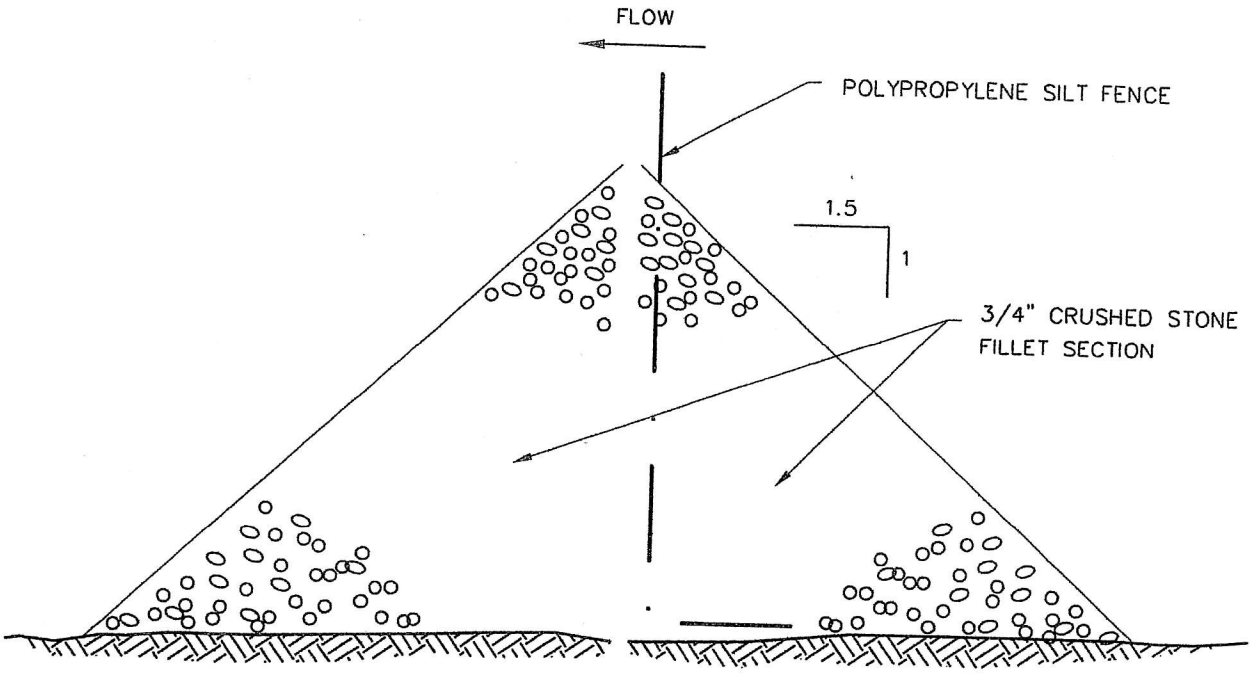

1. PLACE CONTINUOUS LENGTH OF SILT FENCE ACROSS DRAINAGE WAY.
2. PLACE 3/4" CRUSHED STONE TO WITHIN 6" OF TOP OF SILT FENCE FABRIC ACROSS DRAINAGE WAY.
3. FOR ACTIVE DRAINAGE OUTFLOW CHECK DAMS SHALL BE PLACED IN SERIES ALONG FLOW LINE TO RETAIN SEDIMENTS.

ALTON HIGHWAY DEPARTMENT
80 Letter S Road
Alton New Hampshire 03809
Phone: 603-875-6808
Fax: 603-875-6809

E-mail: altonhighway@metrocast.net

Figure 15:
Stone Check Dam
Town of Alton, NH
Standard Details

FEBRUARY 5th 2007

Not to Scale

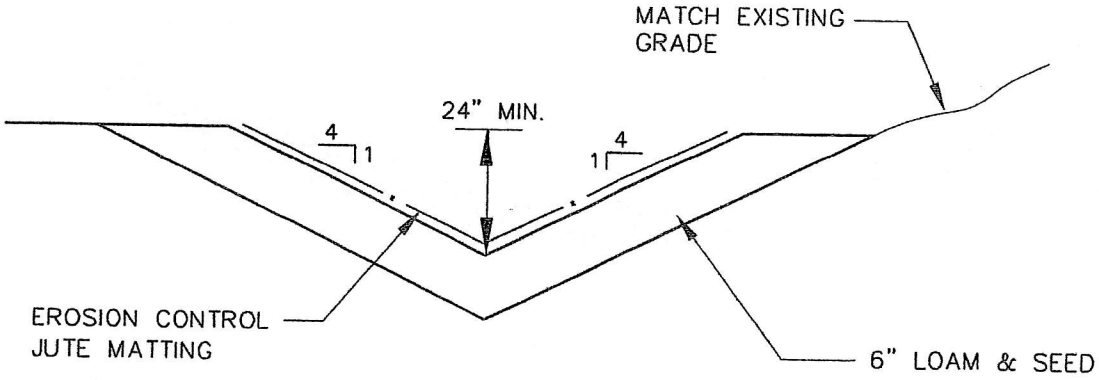

Grass Lined Swale

ALTON HIGHWAY DEPARTMENT
80 Letter S Road
Alton New Hampshire 03809
Phone: 603-875-6808
Fax: 603-875-6809

E-mail: altonhighway@metrocast.net

Figure 16:
Grass Lined Swale
Town of Alton, NH
Standard Details

FEBRUARY 5th 2007

Not to Scale

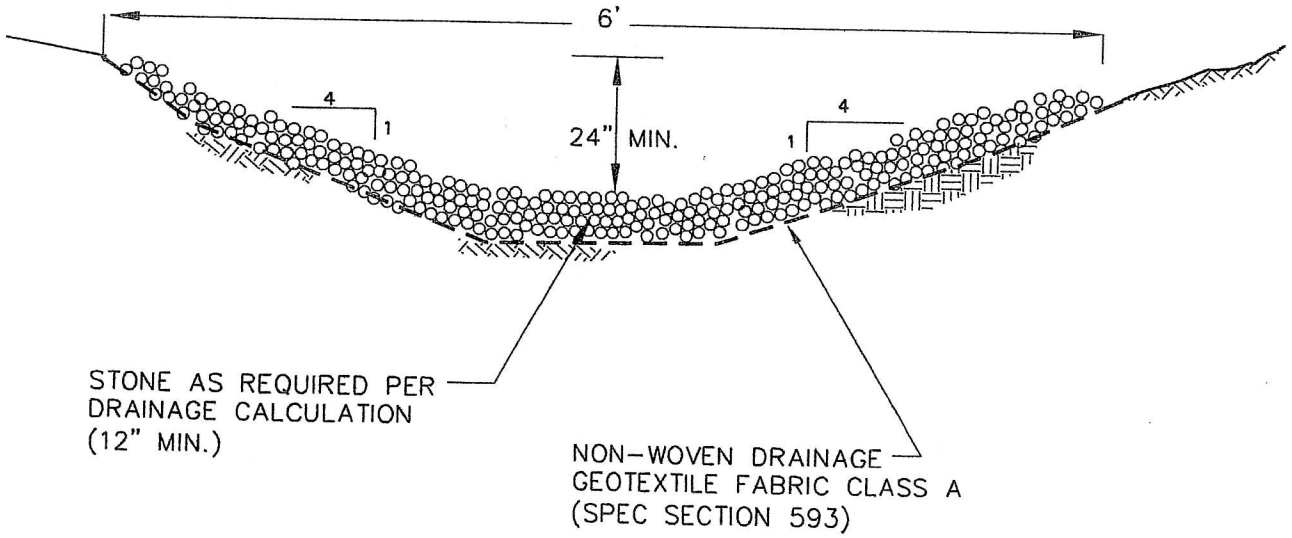

Stone Lined Swale

ALTON HIGHWAY DEPARTMENT
80 Letter S Road
Alton New Hampshire 03809
Phone: 603-875-6808
Fax: 603-875-6809

E-mail: altonhighway@metrocast.net

Figure 17:
Stone Lined Swale
Town of Alton, NH
Standard Details

FEBRUARY 5th 2007 *Not to Scale*

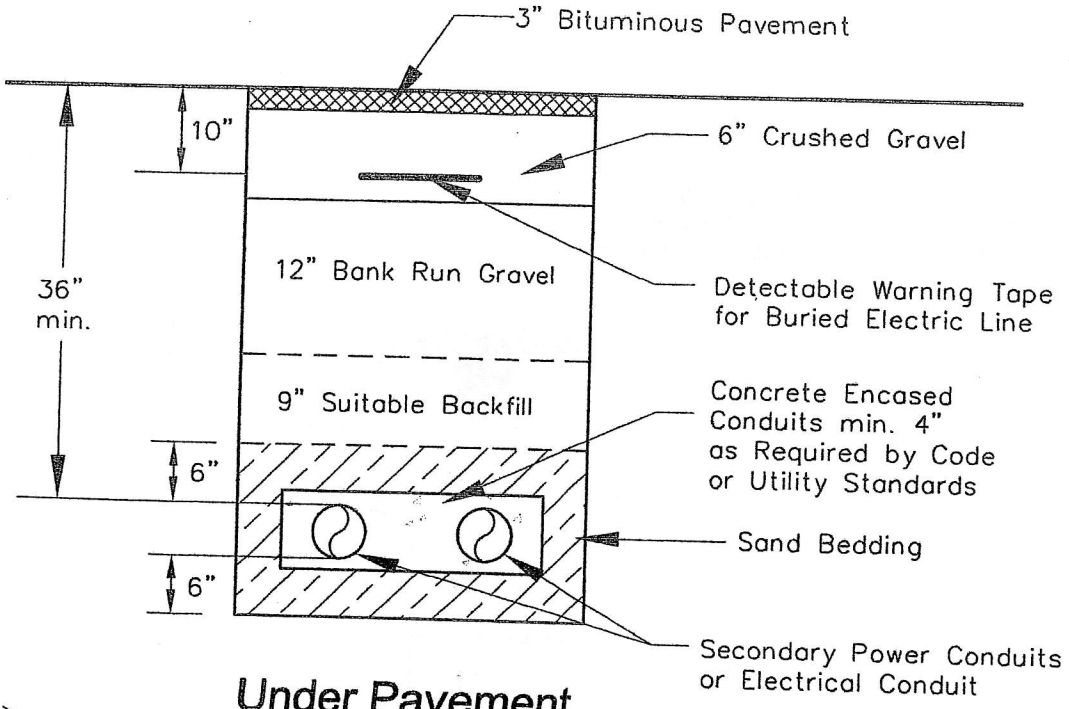

Under Pavement

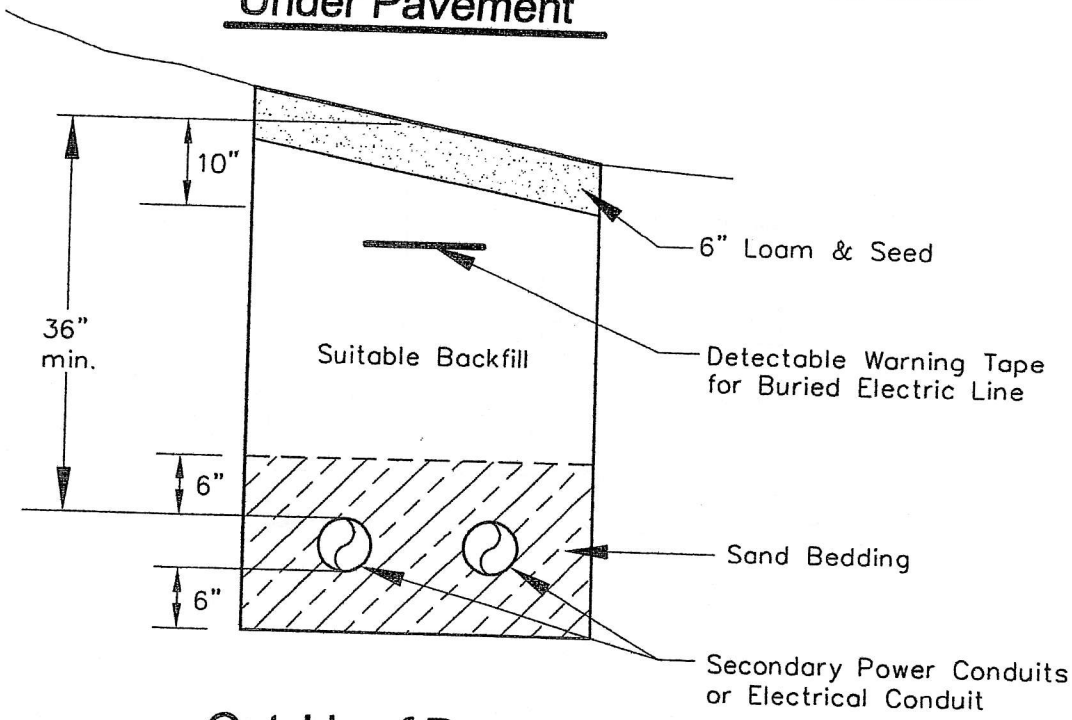

Outside of Pavement

ALTON HIGHWAY DEPARTMENT
80 Letter S Road
Alton New Hampshire 03809
Phone: 603-875-6808
Fax: 603-875-6809

E-mail: altonhighway@metrocast.net

Figure 18:
Electrical Trench
Town of Alton, NH
Standard Details

FEBRUARY 5th 2007

Not to Scale

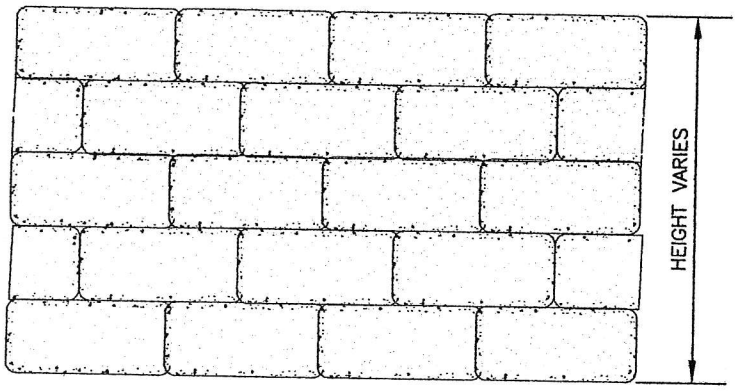

Elevation View

NOTES:

1. RETAINING WALLS UP TO TWO FEET HIGH SHALL BE CONSTRUCTED OF MORTARED MASONRY RUBBLE AND CONSTRUCTED IN A SIMILIAR FASHION AS DETAIL 4: MASONRY RUBBLE HEADWALL.
2. RETAINING WALLS GREATER THAN TWO FEET HIGH SHALL BE CONSTRUCTED WITH REDI-ROCK STANDARD CONCRETE BLOCKS WITH A SPLIT LIMESTONE FACE OR ENGINEER'S APPROVED EQUIVALENT. APPLICANT TO PROVIDE DESIGN DRAWINGS AND CALCULATIONS FOR PROPOSED PRECAST RETAINING WALL STAMPED BY A NEW HAMPSHIRE LICENSED PROFESSIONAL ENGINEER.
3. RETAINING WALL SHALL BE INSTALLED BY MANUFACTURER OR UNDER MANUFACTURER'S SUPERVISION AND IN ACCORDANCE WITH MANUFACTURER'S SPECIFICATIONS.
4. BACKFILL LIFTS SHALL BE A MAXIMUM OF 12" DEEP PRIOR TO COMPACTION.
5. THE RETAINING WALL SHALL BE CORED EVERY 300' TO ALLOW 4" PERFORATED DRAIN TO DISCHARGE.

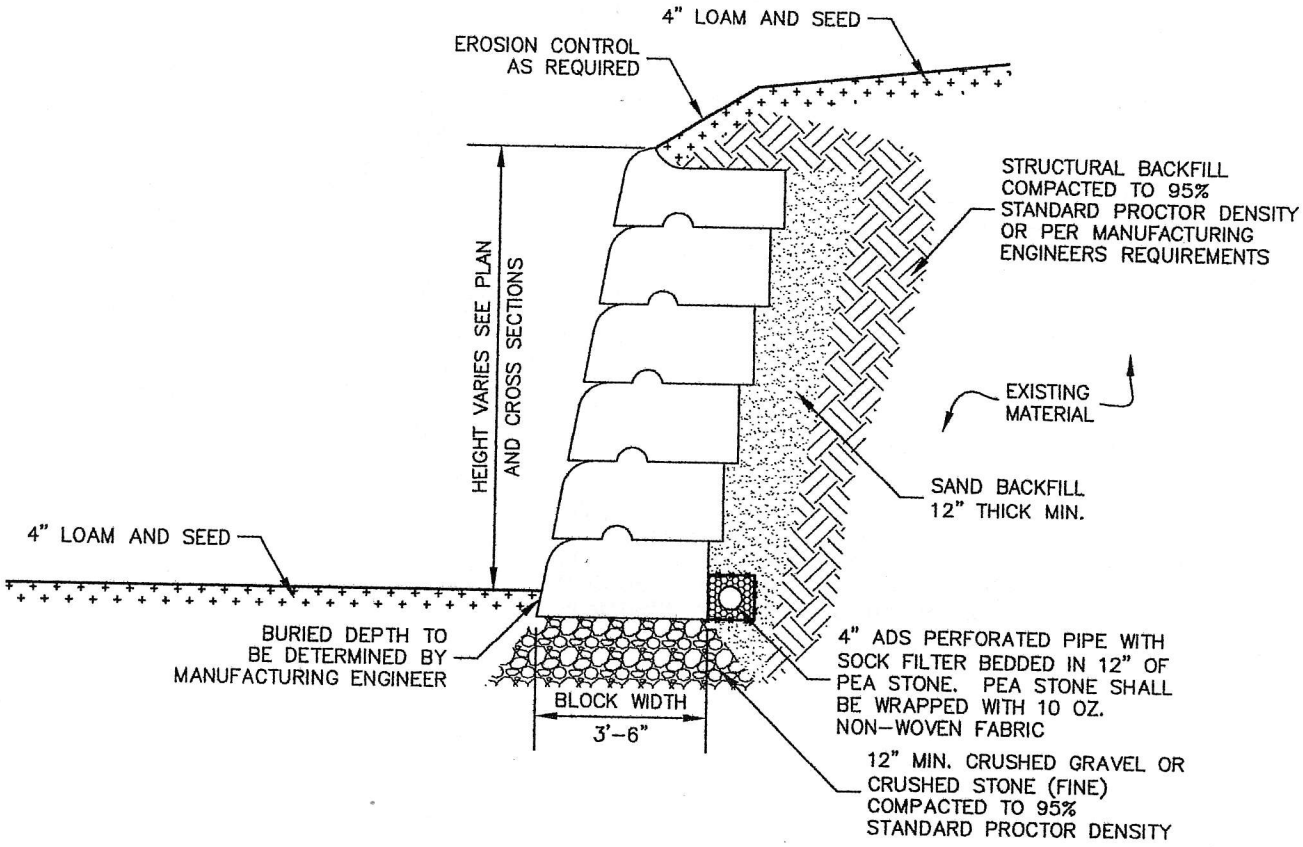

Section View

ALTON HIGHWAY DEPARTMENT
80 Letter S Road
Alton New Hampshire 03809
Phone: 603-875-6808
Fax: 603-875-6809

E-mail: altonhighway@metrocast.net

Figure 19:
Retaining Wall

Town of Alton, NH
Standard Details

FEBRUARY 5th 2007

Not to Scale

Section 5. ROAD L AYOUT PROCEDURES

5.1 The Selectmen may layout any Class V highway, Class VI highway, Winter Road, Summer Road or Logging Access Road upon petition, provided there shall be an occasion. This procedure may also be used to apply for reclassification of an existing Class VI highway to a Class V highway, provided the Selectmen either grant permission for the petitioners to bring the road up to the minimum standards at their own expense or the Selectmen are convinced of a significant public need to the extent that waivers of these standards may be warranted.

5.2 An occasion for a highway layout shall only exist if the Board of Selectmen determines there is a public need.

5.3 The act of laying out a Town highway is a matter vested exclusively within the sound discretion of the Selectmen. The Selectmen shall not be obligated to vote to layout a road simply as a matter of right upon petition. No other Town body, including, but not limited to the Planning Board, Town Meeting or the Highway Agent has jurisdiction to layout a Town road or obligate the Town for any type of road maintenance without specific and legal authority to do so.

5.4 Any person may petition the Selectmen to layout a public highway, using the procedures described herein, provided that any one of the following conditions apply:

(a) The proposed road does not presently exist;

(b) The roadway exists but is not depicted on a plat or plan which has been approved by the Alton Planning Board

(c) The petitioner desires Town maintenance during winter months only:

(d) The petitioner desires access over someone else's property for logging operations:

(e) The petitioner desires Town maintenance of an existing private road which series as access to a summer cottage.

(f) The petitioner desires Town maintenance of an existing Class VI highway.

(g) The petitioner desires a public right of access and Town maintenance of an existing private street which has been depicted on a plat or plan which has been approved by the Planning Board, but the petitioner is unable to provide a warranty deed to the Town.

(h) The petitioner desires a public right of access to private property for a commercial purpose, where no public access exists at the time of the petition, provided said Layout is for a Class VI highway, not be maintained by the Town.

(i) The petitioner desires a public right of access and Town maintenance of an existing private road as part of a betterment process under RSA 231:29.

5.5 Any person seeking Town ownership and/or maintenance of a road under circumstances which do not apply under this Section should refer to the provisions in Section 6.

5.6 Upon receipt of a petition and all other required materials, the Selectmen shall schedule a discussion of the petition at their next regularly scheduled meeting for the purposes of determining whether a Public Hearing shall be held.

5.7. A petition for a highway layout must include the following:

(a) A plan which depicts applicable bearings and distances, easements and any other existing features such as waterways. drainage structures. driveways, etc., as certified by a licensed land surveyor or New Hampshire Registered Professional Engineer;

(b) An appraisal of the proposed layout by a New Hampshire certified appraiser accompanied by a statement as to the amount of any monetary damages which would result from the layout if approved:

(c) A notarized title certificate issued to the Town which identifies abutters to the proposed layout, including all current property owners, tenants, mortgage and lien holders;

(d) A statement as to the public need for the layout.

5.8 The petitioner(s) shall be required to pay in advance, all reasonable fees incident to the request for road layout as set forth in Section 14.

5.9 The Selectmen may, at anytime during this process, deem it necessary for an engineering study to be conducted at the expense of the petitioner(s). Said study shall be required if the Selectmen determine professional evaluations are an essential part of the review process. In the event a study is required for the purposes of evaluating surface or sub-surface conditions, the petitioner(s) shall assume all responsibility for the contractual arrangements and fees associated with such an investigation. However, the engineer chosen must be a New Hampshire Registered Professional Engineer who is acceptable to the Highway Agent.

5.10 Upon a determinationn by the Selectmen that a Public Hearing shall be scheduled, they shall have the Town Administrator cause notice in writing of a time and place of Public Hearing, said notice to be issued at least thirty (30) days previous to the hearing. Notice of the hearing shall be sent via certified mail to the first petitioner and to each owner of land over which such highway may pass (see RSA 231:10) and shall be posted in at least one newspaper of general circulation and in two public locations. The Selectmen shall request written testimony from the Police Chief, Fire Chief, Town Planner, Highway Agent, Town Attorney and any other Town Official as may be applicable.

5.11 The purpose for having a Public Hearing shall be to determine if a public need exists and if the proposed highway meets all of the requirements established under these policies and regulations.

5.12 In considering whether or not a public need exists, the Selectmen shall conduct a review based in part upon the following criteria:

(a) Will the layout of the highway benefit the community and not just the petitioners?

(b) What are the known road surface and sub-surface conditions?

(c) Is there any documented history of an adverse nature pertaining to driveway access, pending or existing litigation. accuracy of maps, contractor defaults, etc.?

(d) What impact will a layout have on the ability of the Town to perform necessary maintenance and what is the likely impact on Town budgets?

(e) Are there any existing encumbrances which would adversely affect the public interest?

(f) Is there an adverse budgetary impact upon the Town due to the payment of monetary damages, if applicable?

(g) If the layout is being requested as a Class V highway, has all of the necessary construction been completed in accordance with Section 4 of these policies and regulations?

(h) What is the length of the highway in conjunction with the degree of use. (NOTE: A minimum of at least an average of eight residences per mile of road and fifty percent (50%) of residential or commercial development, may be considered to 'be a reasonable degree of use in order to demonstrate evidence of public need.)

(i) Does the highway under consideration for layout connect with an existing Town road or State highway within the Town of Alton? (NOTE: Streets which connect to roads in an adjacent Town will generally not be considered for acceptance without an inter-municipal agreement covering snow plowing and emergency services.) -

(j) Are there any other outstanding issues which provide convincing evidence of a public need or lack thereof?

5.13 During the Public Hearing, any person in attendance may present testimony for or against the proposed layout, according to the rules and in a manner prescribed by the Chairman of the Board of Selectmen. Also, the Board may schedule a site visit at the location of the proposed road during any point in the review process.

5.14 At the conclusion of the hearing, the Selectmen may render a decision at their convenience. The Selectmen may also:

(a) require the petitioner(s) to gather more evidence;

(b) recess the hearing to another time and place:

(c) adjourn the meeting without accepting the layout, or

(d) vote to conditionally layout the highway provided that a specific time frame is designated for all conditions to be met and that a return of layout is not executed until such time as the Selectmen have determined that all conditions are met.

5.15 A decision to approve a layout shall consist of a motion which designates the type of highway to be laid out and a determination as to the amount of monetary damages (if any) to be paid by the Town to the abutters.

5.16 Following a vote of the Selectmen to approve a layout, the Town Administrator shall prepare a "Return of Layout" for the Selectmen to sign as soon as possible upon a recommendation by the Highway Agent that all of the conditions relative to the layout have been met. Once the Selectmen have duly executed the "Return of Layout", it shall then be recorded at the County Registry of Deeds.

5.17 As part of this Section, the Selectmen wish it to be known that under the statutes of the State of New Hampshire, the laws pertaining to the layout of Town highways are extremely complicated and may require legal opinions and definitions beyond the ability of the Town to render assistance to any potential petitioner. Therefore, each petitioner shall, if necessary, avail of himself/herself, private legal counsel to assist in this process. The Town of Alton makes no obligation to act in any capacity which may be considered customarily in the purview of an attorney.

Section 6. STREET ACCEPTANCE PROCEDURES

6.1 Any person may petition the Selectmen to accept a street under this Section, provided the street is an existing roadway which corresponds in its location and lines with a street shown on a subdivision plat or site plan which has been approved by the Planning Board and all other requirements of this Section have been met.

6.2 An occasion for street acceptance shall only exist if the Board of Selectmen determines there is a public need.

6.3 The act of accepting a Town road under these policies and regulations is vested exclusively within the sound discretion of the Selectmen. The Selectmen shall not be obligated to vote to accept a road simply as a matter of right upon petition or because a road was built to Town standards or because the road has been approved by the Planning Board. However, any person may submit a petition for a warrant article to be considered at a Town Meeting whereby a street is offered for acceptance, provided all applicable procedures as determined by State Law are complied with.

6.4 A petition for the Selectmen to accept a street shall be construed as a request for establishing a Class V highway.

6.5 Upon receipt of a petition and all other required materials, the Selectmen shall schedule a discussion of the petition at their next regularly scheduled meeting for the purposes of determining whether a Public Hearing shall be held.

6.6 A warranty deed for the proposed street shall be tendered to the Town for acceptance as part of the petition. The deed language shall reference the plans approved by the Planning Board and contain specific information describing applicable bearings and distances, easements and existing features such as drainage locations, driveways, adjacent map and lot numbers, etc. No petition shall be considered for a Public Hearing without these requirements being met. Furthermore, the Town reserves the right to require any changes in the deed language which in the opinion of the Selectmen will be in the Town's Best interest.

6.7 The Selectmen will not consider a street acceptance which requires the condemnation (a taking by eminent domain) of land. As part of the request for acceptance implied by the petition, the Town must assume an offer is being made to dedicate and transfer title of the land on which the right-of-way shall be situated. Therefore, a petition for street acceptance must contain a certificate of title made out to the Town which includes all abutting owners (as defined by RSA 231:10) as irrefutable proof that the petitioner(s) have the legal authority to meet this requirement.

6.8 A petition for street acceptance must be accompanied by a copy of the plans which have been stamped and approved by the Planning Board and must include all road construction plans and specifications with as-built documentation certified by a Registered Professional Engineer.

6.9 The petitioner(s) shall be required to pay in advance, all reasonable fees incident to the request for street acceptance as set forth in Section 14.

6.10 The Selectmen may, at anytime during this process, deem it necessary for an engineering study to be conducted at the expense of the petitioner(s). Said study shall be required if the Selectmen determine professional evaluations are an essential part of the review process. In the event a study is required for the purposes of evaluating surface or sub-surface conditions, the petitioners shall bare all responsibility for the contractual arrangements and fees associated with such an investigation. However, the engineer chosen must be a New Hampshire Registered Professional Engineer who is acceptable to the Highway Agent.

6.11 Upon a determination by the Selectmen that a Public Hearing shall be scheduled, they shall have the Town Administrator cause notice in writing of a time and place of Public Hearing, said notice to be issued at least fourteen (14) days previous to the hearing. Notice of the hearing shall be sent to all petitioners and shall be posted in at least one newspaper of general circulation and in two public locations. The Selectmen shall request written testimony from the Police Chief, Fire Chief, Town Planner, Highway Agent, Town Attorney and any other Town Official as may be applicable.

6.12 The purpose for having a Public Hearing shall be to determine if a public need exists and if the proposed street meets all of the requirements established under these policies and regulations.

6.13 In considering whether or not a public need exists, the Selectmen shall conduct a review based in part upon the following criteria:

(a) Will acceptance of the street benefit the community and not just the petitioners?

(b) Does the street in its present condition adequately address safety issues such as proper drainage, lighting, signage and slopes?

(c) What are the known road surface and sub-surface conditions?

(d) Is there any documented history of an adverse nature pertaining to driveway access, pending or existing litigation, accuracy of maps, contractor defaults, etc.?

(e) What impact will acceptance have on the ability of the Town to perform necessary maintenance and what is the likely impact on Town budgets?

(f) Are there any existing encumbrances which would adversely affect the public interest?

(g) Has all of the necessary construction been completed in accordance with Section 4 of these policies and regulations? (NOTE: for the purposes of this requirement, the Selectmen may consider a road to have been constructed in conformance with the Town's minimum road standards if a properly completed petition for street acceptance is received within four (4) years of a road construction bond having been released by the Planning Board, provided that no previous petition for the same road had been denied by the Selectmen.)

(h) What is the length of the street in conjunction with the degree of use. (NOTE: A minimum of at least an average of eight residences per mile of road and fifty percent (50%) of residential or commercial development, may be considered to be a reasonable degree of use in order to demonstrate evidence of public need.)

(i) Does the street under consideration for acceptance connect with an existing Town road or State highway within the Town of Alton? (NOTE: Streets which connect to roads in an adjacent Town will generally not be considered for acceptance without an inter-municipal agreement covering snow plowing and emergency services.)

(j} Are there any other outstanding issues which provide convincing evidence of a public need or lack thereof?

6.14 During the Public Hearing, any person in attendance may present testimony for or against the proposed acceptance, according to the rules and in a manner prescribed by the Chairman of the Board of Selectmen. Also, the Board may schedule a site visit to view the street during any point in the review process.

6.15 At the conclusion of the hearing, the Selectmen may render a decision at their convenience. The Selectmen may also:

(a) require the petitioner(s) to gather more evidence;

(b) recess the hearing to another time and place;

(c) adjourn the meeting without accepting the street or

(d) vote to conditionally accept the street provided that a deed is neither accepted nor recorded until such time as the Selectmen, upon the advice of the Highway Agent, determine that all conditions have been met.

6.16 A decision to accept a street shall consist of a motion by which the street is defined as a Class V highway. Furthermore, said acceptance shall be conditioned upon the Town receiving a warranty deed and a signed release from each mortgage and lien holder, if applicable, in a format and containing only such language as may be acceptable to the Selectmen, at which point the Board of Selectmen shall vote to accept the deed and have it recorded at the County Registry of Deeds.

6.17 The Selectmen may also include any other conditions as part of a street acceptance as they may deem necessary to be in the best interest of the Town.

6.18 As part of this Section, the Selectmen wish it to be known that under the statutes of the State of New Hampshire, the laws pertaining to the acceptance of dedicated streets are extremely complicated and may require legal opinions and definitions beyond the ability of the Town to render assistance to any potential petitioner. Therefore, each petitioner shall, if necessary, avail of himself/herself, private legal counsel to assist in this process. The Town of Alton makes no obligation to act in any capacity which may be considered customarily in the purview of an attorney.

PAVED

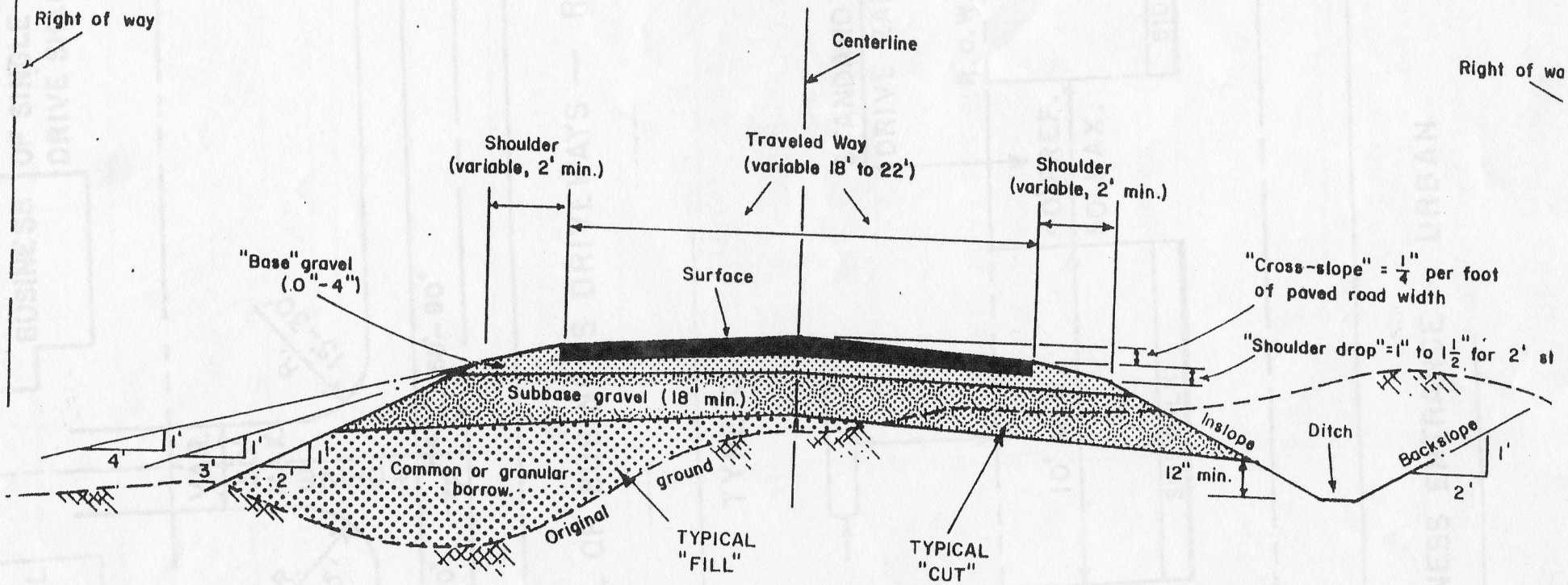

DESIRABLE MINIMUM DIMENSIONS
OF A LOW—VOLUME PAVED ROAD
(MAINE)

Developed by
MAINE LOCAL ROADS CENT
M.D.O.T.
1989

Figure 2

Section 7. DRIVEWAYS

7.1 It shall be unlawful to construct or alter any driveway or the approach to any driveway within the limits of any Town right-of-way without a written permit issued by the Highway Agent. No work shall be permitted prior to a permit being issued.

7.2 An application for a driveway permit is contained in Section 16 of these policies and regulations. Any person seeking to install or alter a driveway shall complete said application in full and attach a drawing(s) which depicts the location, drainage structures, traffic control devices, grades and elevations, type of surface material(s) and any other pertinent information as may be applicable. Each application shall also include payment in full as described in Section 14.

7.3 An applicant for a driveway permit shall agree to indemnify, save harmless and defend the Town of Alton from any and all legal or other claims that may be made against the Town as a result of the issuance of a driveway permit.

7.4 No driveway permit shall be issued when, in the opinion of the Highway Agent, the permit may result in an unsafe condition due to visibility or other hazard(s).

7.5 No driveway shall be constructed or altered which has a traveled way that is greater than forty feet (40') in width within the Town right-of-way.

7.6 All driveways which intersect with a Town right-of-way shall be required to meet the following standards:

(a) Driveway design shall conform to the recommended criteria as set forth upon inspection by the Highway Agent, in accordance with standards *developed by the New Hampshire Department of Transportation.*

(b) Road intersections shall be ninety degrees (90) whenever possible (measured from centerline to centerline). Under no circumstances shall an intersection be constructed at a horizontal angle of less than sixty degrees (60). Intersection grades shall not exceed two percent (2%) for distance of fifty feet (50') from the intersection of the edges of pavement when measured along the centerline of the traveled way. The Highway Agent may allow slopes to exceed five inches (5") per ten feet (10') at road intersections under extenuating circumstances.

(c) Curve radii at street intersections shall not exceed twenty-five feet (25).

(d) Sight distances at horizontal, vertical and intersection locations shall conform to recommended criteria as set forth by the Highway Agent in accordance with standards set forth by the American Association of State Highway and Transportation Officials (AASHTO).

(e) It shall be unlawful for any person to cause running water or surface water run-off to enter upon a Town highway. Whenever a driveway is installed or altered, surface water, (whether natural flowage or a result of surface run-off), must be directed away from the Town highway traveled way by means of proper grading and/or installation of a culvert(s). Culverts shall consist of pipes made of smooth bore polyethylene or aluminum or ductile iron or reinforced concrete. All pipe connections must be sealed in accordance with specifications as set forth by the manufacturer. The minimum diameter shall be twelve inches (12"), except when larger pipes *are* required by the Highway *Agent.* The minimum amount of cover shall - be two feet (2') from top of pipe. Pipe inlets shall be constructed to minimize circumvention; (headwalls are required); Pipe outlets shall be constructed so as to prevent water flow and other soils from entering upon a Town Highway at all times. NOTE: The Town of Alton is not responsible for any expenses associated with the installation, maintenance or repairs to culverts or any other privately owned objects that are located within the Town's right-of-way.

(f) Erosion shall be controlled at all times (but especially during construction) in accordance with the "Erosion and Sediment Control Design Handbook for Developing Areas in New Hampshire" prepared by the USDA Natural Resources Conservation Service (formerly the Soil Conservation Service). Drainage slopes which exceed a five percent (5%) grade shall require permanent erosion control mechanisms which have been approved by the Highway Agent. Back slopes of drainage ditches should not be steeper than2:1.

(g) Driveways shall be constructed to ensure the structural integrity of the edge of pavement at the intersection with a Town road is maintained. In the event of pavement deterioration due to a driveway, the permit holder or owner of the lot shall be responsible for repairs to the satisfaction of the Highway Agent.

(h) Only one improved driveway entrance per lot shall be permitted. Additional driveways shall not be permitted, but other unimproved driveways may be allowed in their natural state (no alterations whatsoever) if pre-existing prior to the issuance of a building permit or a subdivision approval (as shown on a plat), whichever comes first.

(i) The Highway Agent may waive any of these conditions not deemed to be essential for public safety.

7.7 The Highway Agent shall review a driveway permit application which meets all of the requirements in Section 7.2 and shall render a decision to approve or deny within fourteen (14) days. A denial shall include specific reasons and any recommendations which may result in subsequent approval. An approval may include any other terms and specifications as the Highway Agent may deem necessary for public safety. Completed Driveway Permit applications may be mailed or dropped off at the Town Hall.

7.8 Whenever a driveway permit is approved which may cause a private road to be obstructed or rendered impassable, it shall be expressly understood that said permit is granted based upon the representations of the applicant that there are no adjoining property owners or users of an existing right-of-way which may be abandoned or altered who have any legal interest in and to its continued use.The Town of Alton is not responsible for providing any access to property over private roads or portions of a right-of-way not generally used for travel. In the event a driveway permit is issued, the Town of Alton has no liability or duty to restore said access.

7.9 In the event it is determined by a court of competent jurisdiction that other persons have an interest in the continued use of an existing driveway, private road, or right-of-way, and that said interested persons have been harmed by the issuance of a driveway permit, then said permit shall be automatically revoked and the applicant or heir thereto shall return the driveway, private road, or right-of-way to its original condition.

7.10 A driveway which is constructed or altered in such a way as to not be in compliance with all of the terms and specifications of an approved permit shall be deemed to be installed or altered without a permit.

7.11 The Code Official shall not issue a Building Permit to any person unless a valid driveway permit has previously been obtained or a permit is issued under this Section.

7.12 Driveway permits shall not be issued which violate the provisions of the Town's Zoning Ordinance or any other applicable land use rule, regulation, law, etc. Every dwelling and lot must be provided with a separate means of access which is located solely on that property.

7.13 No structures, buildings, asphalt, recreation facilities, permanent or portable signs, lights, poles, posts, gates, displays, fences, walls, shrubs or other objects shall be installed within a Town right-of-way unless specifically authorized by the Highway Agent. No permit shall be required to install a mail box or newspaper box, however, it shall be expressly understood the Town has no liability whatsoever for damages to any objects located within a Town right-of-way, whether permitted or not.

7.14 The penalty for a breach of Town Highway Policies and Regulations as relating to Driveway Permits shall be a violation (subject to criminal prosecution) and liability for the cost of restoring the Town right-of-way to a condition satisfactory to the Highway Agent. In the event of an immediate hazard, the Highway Agent shall take whatever action is deemed necessary to eliminate the hazard, to include removal of pavement, trees, soil, vegetation or other structures and the installation of ditches.

7.15 In the event the Highway Agent is unavailable to fulfill the responsibilities under this Section, he/she may authorize the Highway Working Foreman or some other Highway Department Employee to act as a designee for the purposes of issuing driveway permits in accordance with the rules and regulations enumerated herein.

Applicant _____
Road Name _____
Tax Map _____ Lot _____
Subdivision _____

Town Of Alton

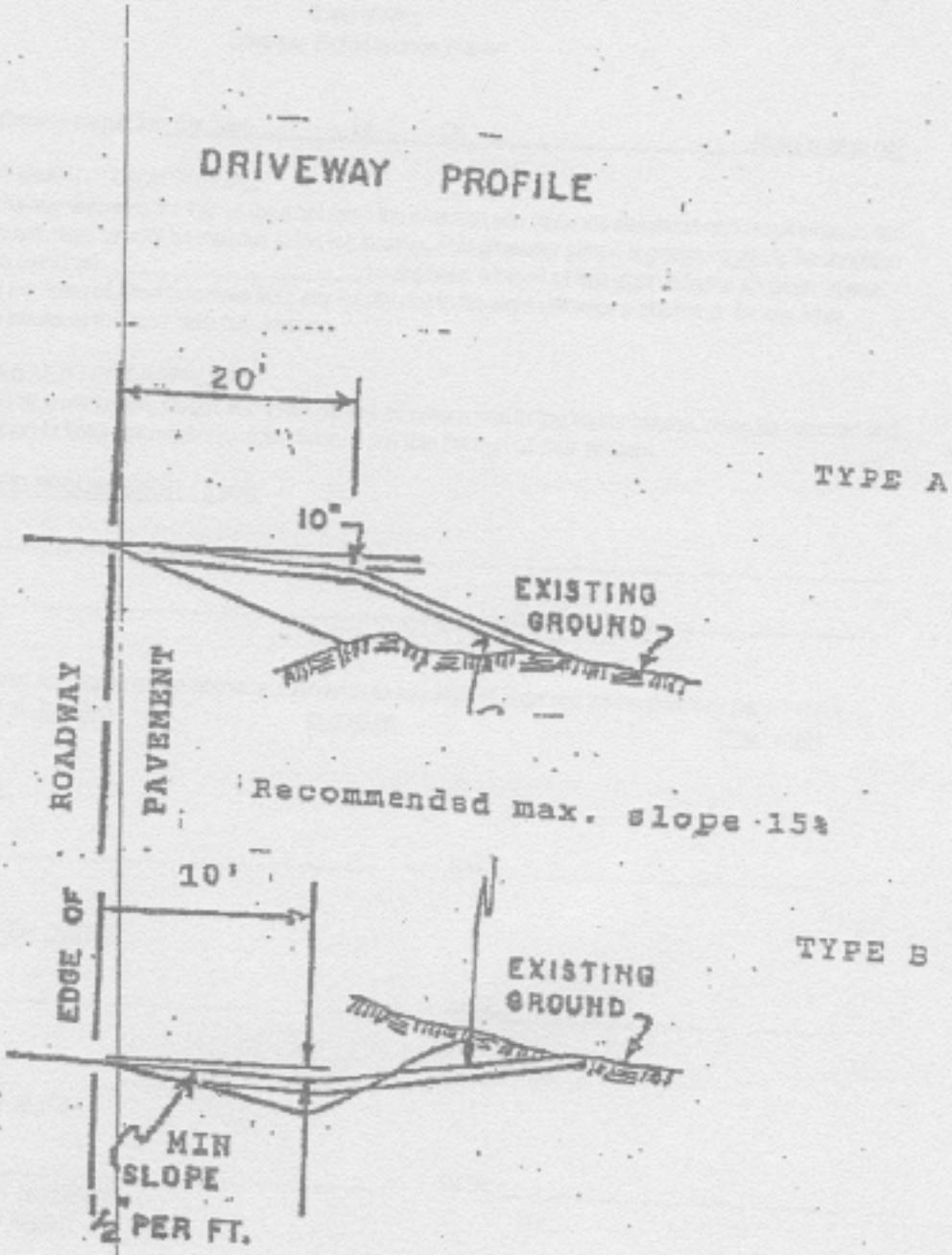

The profiles may vary as required for sidewalks, culverts, etc., as approved by the Director of Public Works.

TYPE A

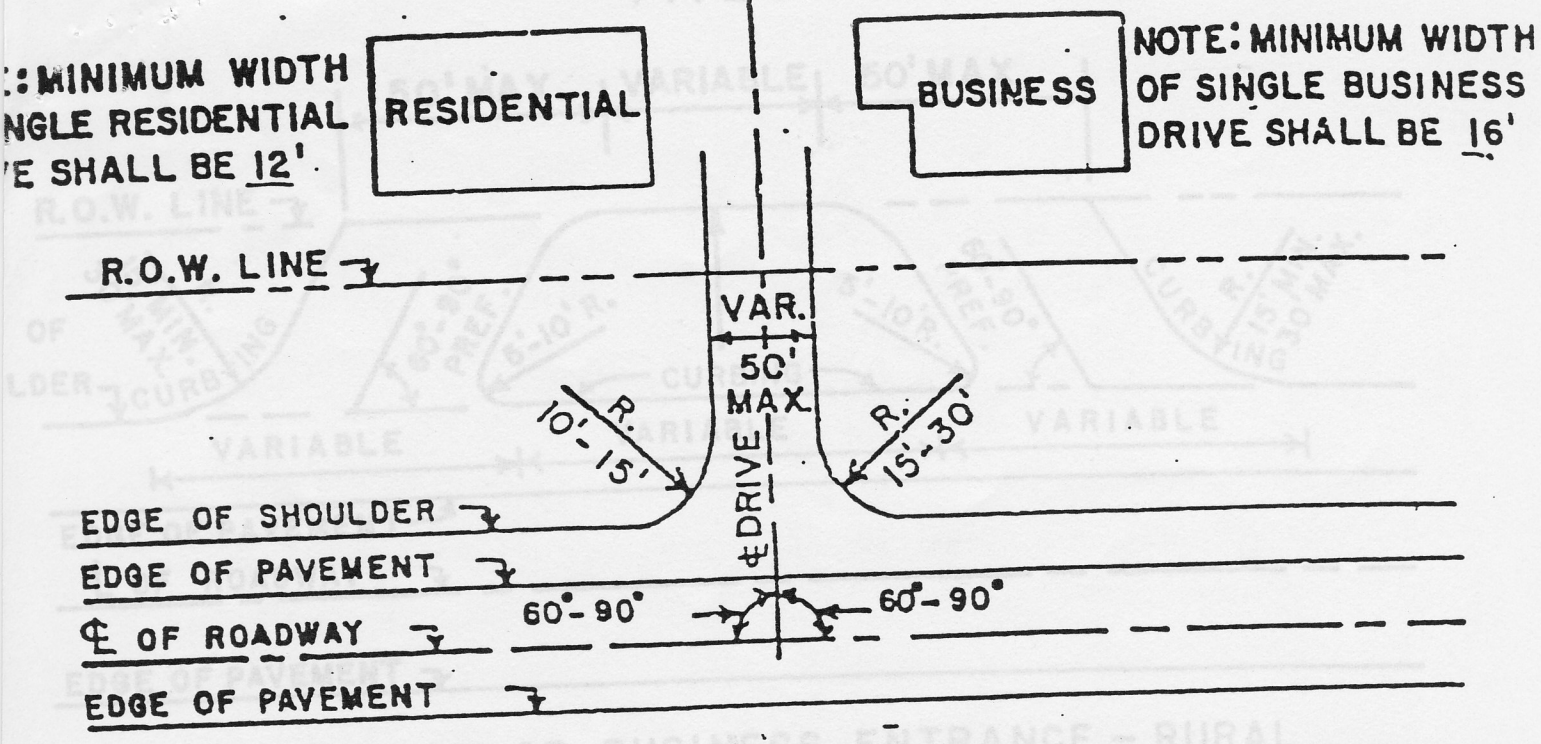

SINGLE RESIDENTIAL OR BUSINESS DRIVEWAYS — RURAL

TYPE C

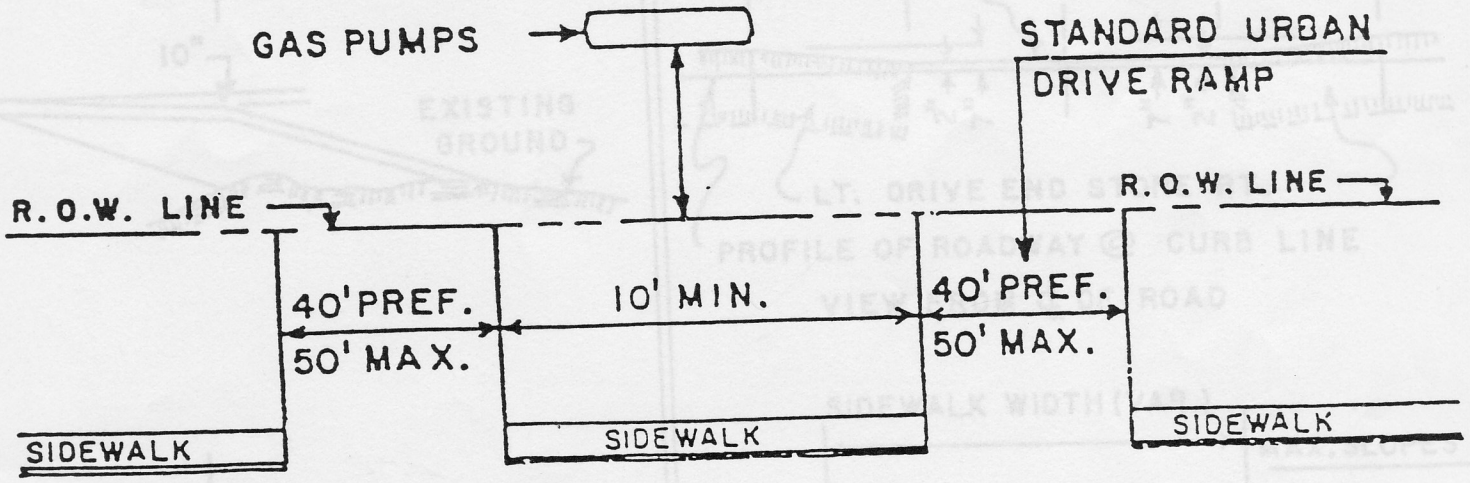

RESIDENTIAL OR BUSINESS ENTRANCE — URBAN

TYPE D

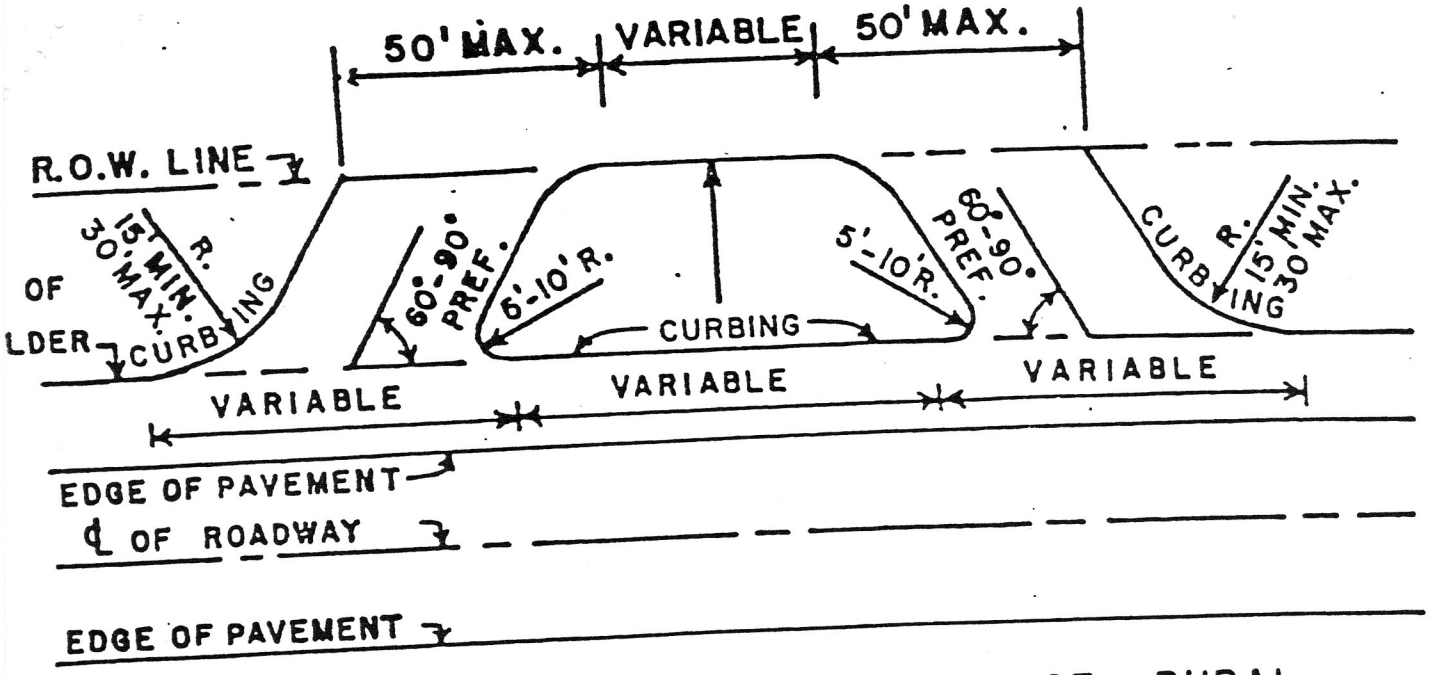

RESIDENTIAL OR BUSINESS ENTRANCE - RURAL

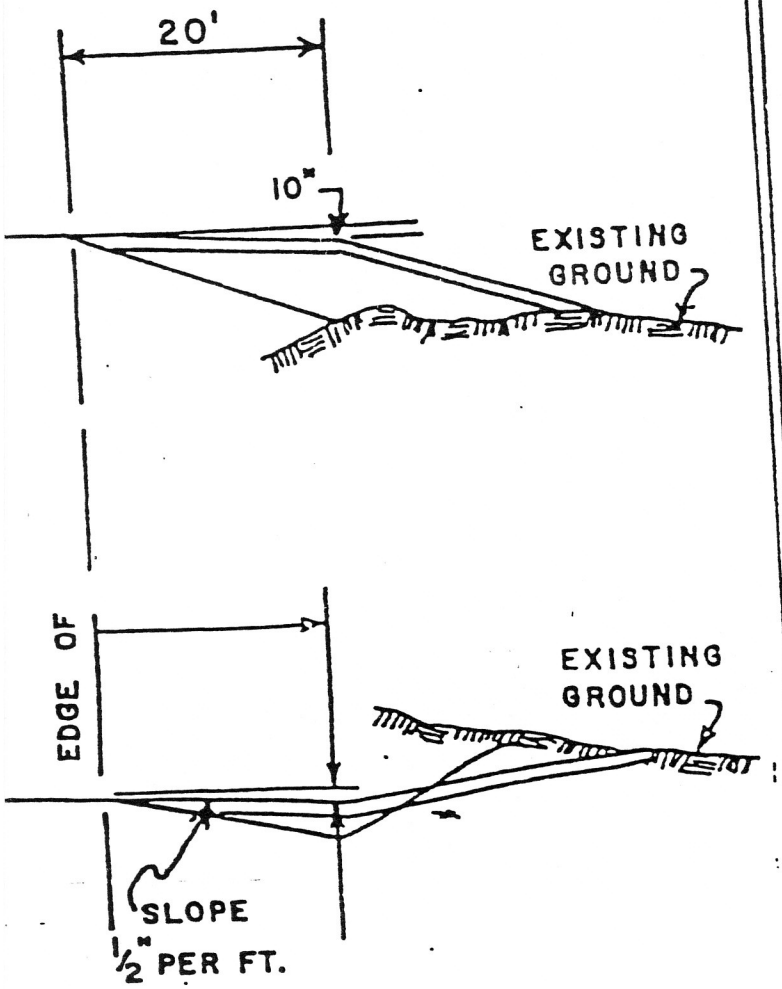

DRIVEWAY PROFILE - RURAL

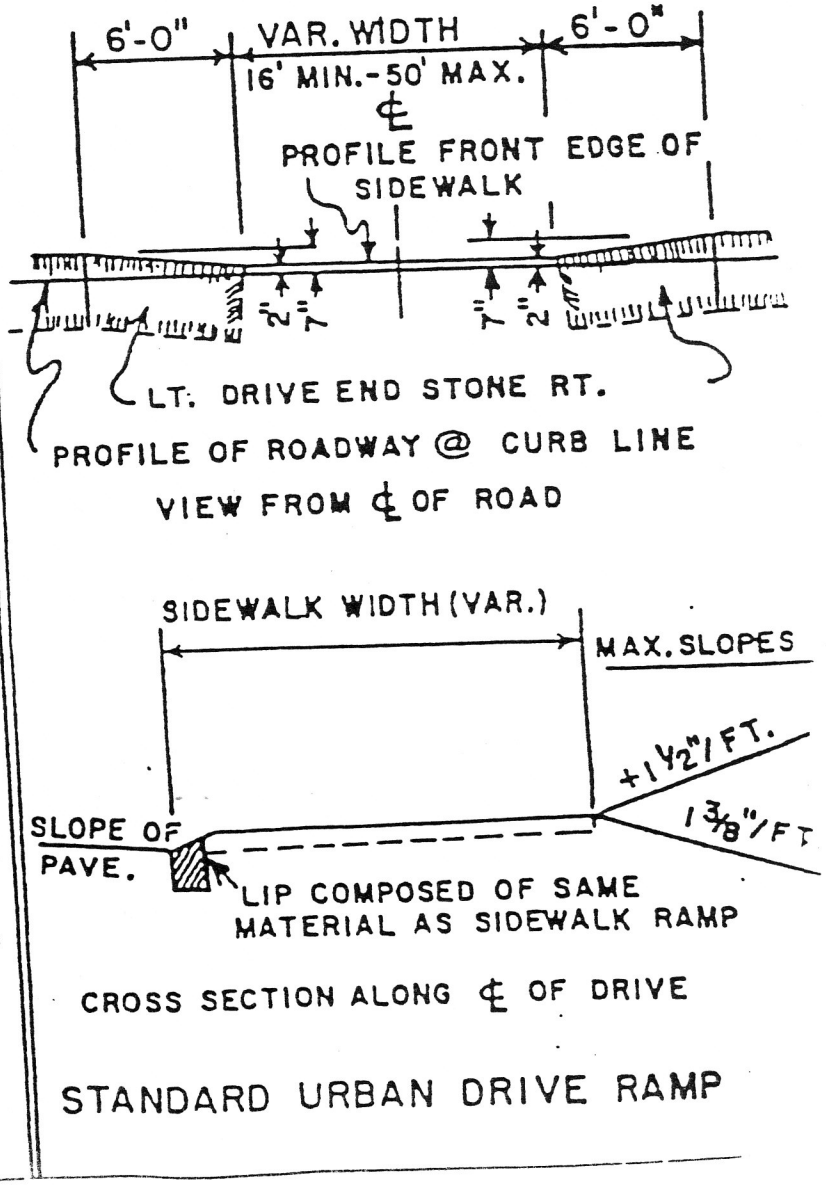

STANDARD URBAN DRIVE RAMP

SECTION 8 STREET INVENTORY

8:1 The following right of ways have been heretofore designated as Class V Highways

Town Roads (V)	**Footage**
Abednego Rd	1,848'
Acorn Dr	797'
Alton Mountain Rd	15,109'
Alton Shores Rd	5,306'
Anniversary Hill Rd	512'
Appleyard Ln	692'
Avery Hill Rd	14,725'
Bachelor Dr	1,704'
Barnes Ave	1,510'
Barlett Rd	824'
Bay Hill Rd	1,579'
Bay Hill Rd	2,223'
Beaver Dam Rd	1,837'
Bell Rd	164'
Bowman Rd	1,626'
Chamberlain Rd (Stkbridge End)	1,549'
Chamberlain Rd (Prospect End)	776'
Chesley Rd	1,694'
Chestnut Cove Rd	10,065'
Church St	961'
Coffin Brook Rd	11,458'
Cook Rd	2,250'
Curtis Court	649'
Dan Kelly Dr	385'
Davis Rd	903'
Depot St	797'
Drew Hill Rd	14,696'
Dudley Rd	12,060'
Echo Point Rd	1,114'
Elliot Rd	904'
Fort Point Rd	5,935’
Frohock Brook Rd	1,585'
Garden Park Rd	253'
Gedney Ct	672'
Gilman's Corner	5,929'
Grandview Ln	1,119'
Halls Hill Rd	7,000’
Hamwoods Rd (Stkbridge End)	1,579’
Hamwoods Rd (Prospect End)	5,164’
Haven Ln	440’
Hayes Rd	4,240’
Hermit Rd	1,912’
Hidden Springs	486’
Hollywood Beach Rd	4,113’
Homestead Place Rd	496’
Horne Rd	2,632’
Hurd Hill Rd	960’
Hutchin's Cir	576’
Jesus Valley Rd	6,948’
Jewett Farm Rd	1008’
Jones Field Rd	755’
Kent Lock Circle	2,821’

Lakewood Dr	4,435’
Lane Dr	1,109’
Legal Ln	322’
Letter S Rd	3,960’
Lily Pond Rd	4,926’
Linwood Dr.	1,984’
Lockes Corner Rd	3,632’
Loon Cove Rd	1,932’
Lot Line Rd	1,140’
Mallard Drive	2,096’
Marlene Dr	1,214’
Mauhaut Shores Rd	3,242’
Meaderboro Rd	3,759’
Meadow Dr	370’
Melody Ln	375’
Minge Cove Rd	4,097’
Mirimichie Hill Rd	792’
Mirimichie Hill Rd	776’
Monument Square Rd	433’
Mooney St	908’
Muchado Hill Rd	16,759’
New Durham Rd	11,021’
Old Wolfeboro Rd	17,303’
Old Wolfeboro Rd	1,705’
Pearson Rd	2,425’
Pheasant Lane	1,666’
Pine St	1,399’
Places Mill Rd	3,962’
Pond Rd	1,288’
Powder Mill Rd	11,367’
Prospect Mountain Rd	16,764’
Quarry Rd	1,800’
Railroad Ave	2,275'
Railroad Yard Access Rd	1,265’
Rand Hill Rd	12,287’
Range Rd	3,189'
Reed Rd	2,614'
Rines Rd	10,185'
Riverlake St	2,107'
Riverside Dr	1,280'
Roberts Cove Rd	13,641'
Roger St	3,337'
Rollins Rd	1,489'
Route 11-D	17,326'
Sanctuary lane	2,302'
School St	1,632'
Smith Point Rd	4,609'
Southview Ln	1,000’
Spring St	3,300'
Stagecoach Rd (Rines Rd to End)	480'
Stagecoach Rd (RT 28 to End)	734'
Stockbridge Corner (Dudley End)	14,858'
Stockbridge Corner (Rt. 28S to ND)	9,272'
Stonewall Rd	2,645'
Sunset Estates Rd (Marlene to Turn P	1,488'
Sunset Shore Dr (Avery to Private)	1,869'
Swan Lake Trail	1,600'
Tom Rd	1,631'
TraskSide Rd	10,000'
Valley Rd	2,619'
Wallsten Rd	961'
Water Rd	1,573'
Woodlands Rd	9,097'
Youngtown Rd	4,150’

8.2 The following rights-of-way have heretofore been designated as Class VI Highways, provided however, they are considered as such only in those locations and only for such lengths as may be duly recognized by the Town, in accordance with available records:

Africa Road
Alton Mountain Road
Bowman Road
Chamberlain Road
Davis Road
Drew Hill
Dudley Road
Farmington Road
Frohock Brook Road
Leighton Mill Road
Miramichie Hill Road
Reed Road
Stagecoach Road
Sunset shore rd

8.3 The following rights-of-way have heretofore been designated as Winter Roads, provided however, they are considered as such only in those locations and only for such lengths as may be duly recognized by the Town, in accordance with available records:

Eugene Drive	Alton Mountain	Roger St
Kimball Lane	Ginney Dr	Dan Kelley Dr
Proctor Road	Spring St Ext	Haslet Dr

8.4 Any other roads or rights-of-way which exist in the Town of Alton that are not listed in Sections 8.1, 8.2, or 8.3 shall be considered private to the extent that the Town has no record of continuing legal responsibility or jurisdiction over them whatsoever. Furthermore, any portion of a road or right-of-way which exists beyond a section or length recognized by the Town as being either a Class V or Class VI Highway shall be considered private.

8.5 Notwithstanding the provisions of Section 7, the Town has no duty to maintain any private road, nor does the Town have any legal authority to regulate or restrict access, require maintenance or enforce any other public highway regulation with regards to private roads, including but not limited to ensuring access for emergency vehicles or utilities.

8.6 It shall be the policy of the Town to ensure the right of the public to travel over Class VI highways and roads closed subject to gates and bars, at all times, notwithstanding the road's condition or Town's absence of liability due to a lack of maintenance.

		ACTON	PRIVATE	TOWN	ROADS	ROADS			
Acadia Lane	364	Clark Road	1,104'	HillSide Dr.	866'	N		Spruce Terr	618'
Alpine Meadows		Clay Point Rd	3,944'	Holly Ln	285'	Nancy Ct	612'	Star Ln	464'
Alpine Way	572'	Clough Pt. Rd	517'	Holmwood Dr	2,022'	Nelsons Pine Pt	175	Stephanie Dr	1,320'
Andreason Dr	2 772'	Coast Ln	491'	Hopwell Rd	3,210'	New Bay St	729'	Summit Ave	364'
Angle Sea Ln	649'	Contentment Ln	517'	Hummingbird Ln	523'	Notla Ln	850'	Swaffield Rd	1,125'
Annie Way	623'	Cottage Pt	444'	I		Nowicki Pt. Rd	444'	T	
Aqua Vue Ln	248'	County Rd	1,515'	Indian Shores	1,515'	0		Temple Dr	930'
Archie Lane	549	Courtyatd Circle	977'	Interaken Rd	412'	Oak Hill Rd	644'	Tibbetts Rd	2,647'
Austin Road	1,352	Cove Pt.Rd	1,690'	Issac Way	153'	Old Camp Rd	422	Timber Ridge Rd	2,587'
Autumn Ave	306'	Cragin Rd	713'	J		Olive St	512'	Torrelli Terr	301'
B		Crystal Road	507'	Johnson Ln	491'	ONeill Rd	1,088'	Towle Rd	829'
Back Bay Path	507'	Crest Rd	634'	Jude Hill Rd	544'	Orchard Ln	1,061'	Tranquility Ln	1,399'
Baileys Lane	523'	D		Juliet Ln	1,230'	Osprey Rd	2,809'	TreeTop Ln	871'
Baker Rd	512'	Damon Dr.	6,574'	K		P		Tufts Terr	348'
Barbara Dr	1,674	Dan Kelley Dr	985'	Keywaydin Dr	1331'	Palm Ln	364	V	
Barr Rd	739'	Dewitt Dr	4,372'	Kenerson Ln		Parandes Dr.	898'	Vamey rd	1,064'
Basin Rd		Diners Place	269'	Kiana Rd	1,082'	Park St	259'	Verna Ln	338'
Baxter Place	1,800	Donald Dr	924'	Kimball Ln	1,051'	Partridge Berry Ln		Viewland Ct	797'
Beach St	280	Dore Dr.	570'	Knights Pond	6,674'	Peggys Cove Rd	781'	Village Pl	333'
Beacon Ave	760	Dot 3 St	1,626'	L		Perkins Rd	718	Virginia Ct	343'
Bear Pond Rd	1,468'	Downing Dr	676'	Lady Slipper Ln	982'	Peters Path	270	W	
Bender Lane	391	E		Lamper Rd	1,800'	Pickerel Pt. Rd		W. A, Marina Rd	2,059'
Bickford Lane	1,291'	Eagles Resst	1,716'	Lamprey Ledge	697'	Pipers Point Rd	3,184'	Watson Pt. Rd	1,435'
Black Point Rd	6,056	Edgerly Rd		Lancer Ln	248'	Plum Isl		Wayside Pl	
Blueberry Ln	225	Elm St	913'	Lantana Ln	428'	Plummer Ln	195	Wendy Dr	470'
Boat Cove Rd	465	Eugene Dr	1,040'	Larry Dr	1,536'	Point Beach Ln	697	Wentworth *way*	581'
Bonny Dr.	655	Eunice Ln	216'	Laura Ln		Potvin Pl	359	Widerstrom Lane	322'
Brad Circle	433	F		Ledge Hill Rd	.919'	Proctor Rd	744'	Wilbert Way	150'
Brandy Terrace	686'	Falcon Way	454'	Legal Ln	325'	Pumpkin Pt. Rd	600	Windswept Rd	1,362'
Brickyard Cove	296'	Femhill Rd	1,473'	Leigh Dr	993'	R		Winni Ave	1,294'
Bridgids Way		Finethy Rd	908'	Levitt Rd	1,922'	Railroad Ave	354	Winter Way	301'
Broadv\way Blvd	370'	Fisher Rd	380'	Lindsay Rd	1,130'	Red Sands Ln	450'	Y	
Brook N Bridle	2 614	Fitzgerald Ave	739'	Lionel Terr	1,019'	Richardson Dr	591	Ymca Rd	2,936'
Butler Drive	1822'	Forest Brook Ln	1,200'	Litch Ln	533'	Riley Rd			
C		Forties Row	602'	Loud Rd	544'	Rocky Ln	201'		
Calef Dr.	1500'	Four Seasons	1,135'	Loveren Ln	174'	Rogers Rd	386		
Camp Adventure	1,384'	G		M		Rum Point Rd	2,381'		
Camp Brookwoods	1415'	Georges Rd	734'	Manbow Rd	396'	Russell *way*	871		
Campfire Pt. Cr	1,135'	Gerald Dr.	285'	Manchester Ave	164'	Rustic Shores Rd	1880'		
Camp Kabeyun Rd	1,125'	Getcho Pit Rd	90'	Marriett Dr	987'	S			
Cascade Terr	903	Ginny Dr	444'	Marsha Dr	1,001'	Saley Way	282'		
Cates Hill Rd	998	Glen Ave	201'	McKone Ln	454'	Sand Peep Ln	150'		
Cathy Ln	512	Goulds Rd	3,759'	McLeod Rd	1,500'	Sandy Pt. Rd	649'		
Central Street	1,383'	Grants Rd	1,404'	Merrymeeting Ln	750'	Sawmill Brook Rd	2,086'		
Charles Circle	214'	H		Mill Cove Rd	845'	Scott Dr	2 392'		
Chesley Way	1500'	Hallin Ct.	354'	Mission Path	238'	Shields Way	232'		
Chickadee Ln	713'	Happy Hollow Dr	243'	Misty Lane	327'	Shore Rd	1,896		
Chipmunk Ln	169	Hasenfuss Ln	1,209'	Mitchell Ave	1,373'	Silver Cascade Wy	597'		
Circle Rd	375	Hawk Dr.		Mt. Pleasant Path	364'	Spring Str	945'		
		Hazlett Rd	375'			Spokies Wy	350'		
		Headley Ave	454'			Sport Emery Rd	3 500		
		Heron Pt. Ln	2,207-			Sunset Estates Rd	1,350'		
		Herrick Lane	475'						

Section 9. TRAFFIC REGULATIONS

9.1 This Section shall consist of traffic regulations pertaining to the following categories:

9.2.A. NO RIGHT TURN ALLOWED

9.2.B. SPEED LIMITS

9.2.C. STOP AND YIELD INTERSECTIONS

9.2.D. PARKING RESTRICTIONS

9.2.E. WEIGHT LIMITS

9.2.A. 1 It shall be unlawful for any motor vehicle operator to make a right turn where posted as follows:

Onto Route 28-A from Bay Hill Road.

Onto Route 140 from School Street.

9.2.A.2 The penalty for a breach of a Direction of Travel Regulation as described in Section 9.2.A.1 shall be a violation and fine of not less than fifty dollars ($50.00), nor more than one hundred dollars ($100.00), in accordance with State Law.

9.2.B.1 Based upon investigations conducted in accordance with the provisions of RSA 265:63, it shall be unlawful for any operator of a motor vehicle to exceed the posted , speed of twenty-five miles per hour (25 mph) on the following roads:

Bay Hill Road, between Routes 28 and 28-A
Barnes Avenue
Church Street
Letter "S" Road
New Durham Road
Mooney St
Appleyard Lane

Pine Street
Railroad Avenue
Bay Hill Road
Roberts Cove Road
Route 11-D

School Street

9.2.B.2 Based upon investigations conducted in accordance with the provisions of RSA 265:63, it shall be unlawful for any operator of a motor vehicle to exceed the posted speed of thirty miles per hour (30 mph) on the following roads:

Alton Shores
Drew Hill
Hayes Road
Hollywood Beach Road
Old Wolfeboro Road
Rines Road
Riverlake Street
Smith Point Road
Trask Side Road
Youngtown Road

9.2.B.3 The speed limit for all other Town roads shall be in accordance with the provisions of RSA 265:60.

9.2.B.4 The penalty for a breach of a Speed Limit regulation as described in Section 9.2.B shall be a violation and a fine in accordance with State Law.

9.2.C.1 The following locations are hereby designated as Posted Stop Intersections. It shall be unlawful for any operator of a motor vehicle to enter upon any of the public highways listed below without first coming to a complete stop on or before an existing stop line, or, absent a painted marking in the road, then at the safest point nearest the intersecting roadway where the driver has a view of traffic which is traveling on the intersecting roadway:

Abednego Road onto Route 28
Alton Mountain Road onto Rand Hill Road
Avery Hill Road onto Alton Mountain Road
Barnes Avenue onto Route 11
Bachelor on to Riley
Bay Hill Road onto Route 11
Bay Hill Road onto Route 28-A
Beaver Dam Road onto Marlene Drive
Bowman Road onto Route 28
Chamberlain Road onto Prospect Mountain Road
Chamberlain Road onto Stockbridge Corner Road

Alton Highway Policies and Regulations

Chestnut Cove Road onto Route 28
Chestnut Cove Road onto Route 28-A
Chestnut Street onto Route 11
Church Street onto Route 11
Church Street onto School Street
Coffin Brook Road onto Route 140
Coffin Brook Road onto Stockbridge Corner Road
Curtis Court onto Route 28-A
Dan Kelley Drive onto Route 28-A
Depot Street onto Route 11 (both intersections)
Drew Hill Road onto Route 28
Drew Hill Road (westbound) onto Gilmans Corner Road
Dudley Road onto Stockbridge Corner Road
Echo Point Road onto Route 28-A
Elliot Road onto Route 140
Farmington Road onto Loon Cove Rd
Fort Point Road onto Chestnut Cove
Gedney Ct onto Trask Side
Gilmans Corner Road onto Route 28
Halls Hill Road onto Route 140
Hamwoods Road onto Prospect Mountain Road
Hamwoods Road onto Route 28 (both intersections)
Hamwoods Road onto Stockbridge Corner Road
Hayes Road onto Drew Hill Road
Hayes Road onto Rines Road
Hermit Rd on to Riley Rd
Hidden Spring Road onto Route 28
Hollywood Beach Road onto Prospect Mountain Road
Homestead Place onto New Durham Road

Horne Road onto Route 140
Horne Road onto Halls Hill Road
Hurd Hill Road onto Route 28-A
Jesus Valley Road onto Route 11
Jewett Farm Road onto Bay Hill Road
Kent Lock Circle onto Stockbridge

Lane Drive onto Coffin Brook Road
Letter "S" Road onto Route 140
Letter "S" Road onto Route 11

Lily Pond Road onto Route
Linwood Dr onto Stockbridge Corner
Lockes Corner Road onto Muchado Hill Road
Lot line Rd onto Rt. 28S

Mauhaut Shores Road onto Route 11
Meaderboro Road onto Muchado Hill Road
Meadow Drive onto New Durham Road
Minge Cove Road onto Route 11
Miramichie Hill Road onto Route 28 (both intersections)
Miramichie Hill Road onto Old Wolfeboro Road
Mooney Avenue onto Route 11
Mooney Avenue onto Route 140
New Durham Road onto Route 28
Old Wolfeboro Road onto Route 11
Old Wolfeboro Road onto Route 28 (all four -intersections)
Pearson Road onto Old Wolfeboro Road
Pheasant lane onto Mallard dr
Pine Street onto School Street
Places Mill Road onto Avery Hill Road
Pond Road onto Roberts Cove Road Powder
Mill Road onto Old Wolfeboro Road
Prospect Mountain Road onto Route 28 (both intersections)
Prospect Mountain Road onto Hollywood Beach Road
Prospect Mountain Road onto Hamwoods Road
Quarry Road onto Route 28
Quarry Road onto Gilman Corner Road (both intersections)
Railroad Avenue onto Smith Point
Road Railroad Avenue onto Chestnut Street
Rand Hill Road (heading south) onto Alton Mountain Road
Rand Hill Road onto Route 11 (both intersections)
Range Road onto New Durham Road
Reed Road onto Route 11-A
Rines Road onto Route 28
Riverlake Street onto Route 11
Riverside Drive onto Route 140
Roberts Cove Road onto Route 28 (both intersections)
Roger Street onto Route 11-D
Roger Street onto Woodlands Drive
Rollins Road onto Route 11
Route 11-D onto Route 11 (both intersections)

School Street onto Route 11
School Street onto Route 140
School Street onto Church Street
School Street onto Pine Street
Smith Point Road onto Route 11
Springwater Road onto Hollywood Beach Road
Springwater Road onto Stonewall Road
Spring Street onto Rand Hill Road
Stage Coach Road onto Rines Road
Stage Coach Road onto Route 28
Stockbridge Corner Road onto Route 28 (both intersections)
Stockbridge Corner Road onto Dudley Road
Stonewall Road onto Prospect Mountain Road
Southview Lane onto Trask Road
Sunset Shore Drive onto Avery Hill Road
Tom Road onto Roberts Cove Road
Trask Road onto Route 28-A
Woodlands Road onto Route 1 1-D (both intersections)
Youngtown Road onto Route 140

9.2.C.2 It shall be unlawful for any operator of a motor vehicle to enter into the following intersections without yielding to on-coming traffic. Said intersections shall be posted accordingly.

Stockbridge Corner Road from Valley Road

9.2.C.3 The penalty for a breach of a Stop Intersection or Yield Intersection regulation as described in Sections 9.2.C shall be a violation and a fine of not less than fifty dollars ($50.00), nor more than one hundred dollars ($100.00), in accordance with State Law.

Alton Highway Policies and Regulations

9.2.D.1 It shall be unlawful for any person to cause a motor vehicle or trailer to be parked or stopped on any public highway or municipal parking lot within the Town of Alton as follows:

(a) During the period November 15t' through April I", between the hours of 10:00 p.m. and 6:00 a.m.; or at any other time during snowstotins when snow removal maintenance is being performed by the Alton Highway Department.

(b) There will be no parking of any trailers (boats, snowmobiles, hauling, ice huts, etc.) in the Town of Alton paved municipal parking lot located on Route 11 in the bay. A reasonable amount of time will be allowed for the loading and unloading of boats, snowmobiles, ice huts, etc. In addition, no trailer parking will be allowed in parking spaces along Route 11 or in the dirt area across the street from the paved parking lot, except during the winter snowmobile trailers will be allowed in the dirt (unpaved) area.

(c) In a manner that is not consistent with official signs that have been installed upon authorization by the Board of Selectmen.

9.2.D.2 The penalty for a breach of a Parking Restriction regulation as described in Section 9.2.D.1 shall be a violation and a fine of Ten Dollars ($10.00). Fines administered under this Section must be paid to the town of Alton within ten (10) days in issuance or they shall automatically be increased to Twenty-five Dollars ($25.00).

9.2.D.3 Any person aggrieved by the issuance of a fine or other penalties as administered under Section 9.2.D.2 may submit a written appeal of the violation to the Board of Selectmen within ten (10) days of issuance.

9.2.D.4 Any motor vehicle or trailer found to be in violation of a Parking Restriction regulation as described in Section 9.2.D.1 shall also be subject to being towed away at the owner's expense.

9.2.E.1 It shall be unlawful for any person to cause a motor vehicle or trailer which exceeds twelve thousand pounds (12,000 lbs. of 6 tons) to be driven, stopped or placed upon the following posed roads at any time without a permit from the Highway Agent. Said roads shall be posted accordingly.

Bay Hill Road
Old Wolfeboro Road (between Route 11 and Route 28)
School Street
Stockbridge Corner Road

9.2.E.2 It shall be unlawful for any person to cause a motor vehicle or trailer which exceeds twelve thousand pounds (12,000 lbs. or 6 tons) to be driven, stopped or placed upon a Class V highway posted bridge at any of the following locations without a permit from the Highway Agent, provided appropriate signs have been posted at the bridge locations and at road intersections where motorists have an opportunity to either turn around or avoid traveling on the road in violation of this Section.

Coffin Brook Road –
Hollywood Beach Road
Roberts Cove Road
Places Mill Rd

9.2.E.3 Due to the impact that adverse weather conditions may have on Town highways, the Highway Agent is hereby empowered to declare "Road Weight Limit Emergencies" to be in effect for a specified time. Upon a declaration of such, public notice shall be given and temporary signs shall be erected which indicate weight limits are in effect on designated roads; and it shall be unlawful for any person to drive or cause to be driven or placed upon any posted road, a motor vehicle or trailer which exceeds twelve thousand pounds (12,000 lbs or 6 tons) at anytime during a road weight limit emergency without a permit from the Highway Agent.

9.2.E.4 Essential utility vehicles (such as oil, propane, electric, telephone, etc.) and school buses shall be exempt from the provisions of Section 9.2.E. However, no person or company shall be relieved of any liability for damages caused to Town roads, streets or bridges at any time.

9.2.E.5 The penalty for a breach of the Weight Limit regulations as described in Section 9.2.E shall be a violation and a fine of not more than one thousand dollars ($1,000.00), in accordance with State Law.

9.2.E.6 Any person found to be in violation of the Weight Limit regulations as described in Section 9.2.E shall be presumed to be responsible for any and all physical damages to the road surface, subsurface and/or structures as may be determined by the Highway Agent and shall be liable for the cost of restoration of the right-of-way to a condition satisfactory to the Highway Agent.

9.2.E.7 Any motor vehicle 'which is suspected of violating these Weight Limit regulations, may be detained by any duly authorized law enforcement official for a reasonable amount of time in order to determine the actual vehicle weight using a certified scale. Vehicles pulled over during these situations shall be allowed to park in a location which the law enforcement official deems to be safe from traffic and the least likely to cause road damage due to the suspected load weight. In the event a vehicle is found to be in violation, the overweight portion of the vehicle load shall either be transferred to another vehicle which is in possession of a valid permit, or the vehicle may be allowed to proceed upon issuance of a permit from the Highway Agent with a surety to be posted in the maximum amount allowed under these policies and regulations.

9.3 The Alton Board of Selectmen may adopt any and all additional traffic regulations as may be permitted by State Law, which they shall deem to be in the best interest of public safety.

9.4 Any person or persons may petition the Selectmen to amend an existing Traffic Regulation or adopt a new Traffic Regulation upon demonstration of reasonable cause. Upon a written request, the Selectmen shall either have the Police Chief conduct a traffic investigation or the Selectmen may require the petitioner(s) to submit the results of an engineering study at their own expense prior-to any action being taken.

9.5 Whenever requested by the Selectmen to conduct a traffic investigation for the purpose of recommending a speed limit, the Police Chief shall solicit three volunteers from different age and gender populations, who shall drive upon a highway using reasonable techniques which shall then be assessed by the Police Chief for the purpose of making a recommendation to the Selectmen.

9.6 The provisions of this Section shall not apply to any emergency or public safety vehicle which is operating in an official capacity or construction and transport vehicles which have been authorized by the Highway Agent for official purposes.

9.7 The provisions of this Section may be enforced by any duly authorized law enforcement official to the extent permitted by law.

Alton Highway Policies and Regulations

Section 9.2.F Traffic Regulations

The following locations are hereby designed as Deer Crossings from October 1 through May 31. A Deer Crossing sign will be posted on Rand Hill Rd. North at the church. At intersection of Rand Hill Rd. and Alton Mountain Road, the sign will be posted on Rand Hill Rd. North.

Section 9.2.G

As of May 21" 2001 the sign "Slow Children at play" has been approved, on Avery Hill Rd. as Well as a 30 mph speed limit sign now designated.

9.8 In so much as possible, the provisions of this Section shall be made known to the public by the posting of signs and public notices. In addition, the Highway Agent may post such additional traffic signs and markings as he/she deems necessary to warn the public of dangerous conditions, upon authorization of the Selectmen and availability of funds. However, the Town accepts no responsibility for any dangerous road condition which is inherent in the highway layout, whether signs are in place or not. Whenever possible, signs and markings shall conform to the latest edition of the "Manual on Uniform Traffic Control Devices" as published by the U.S. Department of Transportation. But, the use of such signs (or absence thereof or deviation from the standards) shall be considered a basic policy decision which is characterized by the exercise of a high degree of official judgment or discretion and therefore subject to the doctrine of sovereign immunity.

9.9 Any person may petition the Selectmen for a road safety sign for any reason whatsoever. Upon receipt of a petition for a road sign, the Selectmen shall have the Police Chief and Highway Agent conduct an investigation and make recommendations thereto. The Selectmen may accept, reject or modify the recommendations received and their decision shall be exclusively within their sole discretion and final. The Town accepts no liability for policy decisions in regards to road signs.

9.10 The Highway Agent shall maintain ari inventory of all street signs, to include type and location, which shall be updated prior to October 1st of each year. Funds shall be requested as part of the budget process to replace any missing sign and to install new signs, as may be directed by the Selectmen.

TOWN OF ALTON

HIGHWAY POLICIES AND REGULATIONS '
AMENDMENT

The Alton Board of Selectmen, acting at a duly posted, public meeting convened on May 18, 1998, voted to adopt the following amendment to the Highway Policies and Regulations, upon the recommendation of the Chief of Police.

SECTION 9.2.B.1 is amended to insert Letter °S" Road as a 25mph highway.

SECTION 9.2.B.2 is amended to delete reference to Letter "S" Road as a 30mph highway.

IN WITNESS WHEREOF, this amendement is approved and adopted to be effective as of the 1st day of June, 1998. ATTEST: -

The Alton Board of Selectmen

_____

_____

_____

_____

_____

ALTON MUNICIPAL BRIDGES

BRIDGE NUMBER	TYPE	NO. SPANS	ROAD INV.NO.	ROAD NAME	OVER	LENGTH (O-T-O)	RECOMMENDED POSTING
078/275	N'1P	2	79	REED ROAD	WGSTALTON BROOK	18'-6"	E-2
1998/l78	W-C	1	51	PLACES MILL ROAD	SUNSET LAKE OUTLET	24'-0"	G2; NARROW BRIDGE
14 U222	NkF	1		LOON COVE ROAD	WATSON BROOK	III-o"	NO POSTING REQUIRED
165/121	PSC	1	73	COFFIN BROOK ROAD	COFFIN BROOK	27'-4"	NPR
180/1 11	CRF	1	73	COFFIN BROOK ROAD	COFFIN BROOK	Z 1'-6"	NPR
L821072	CRFI		52	HOLLYWOOD BEACH ROAD	BROOK	l6'-0"	NPR
I93/289	CS	1	118	ROBERTS COVE ROAD	BEAVER BROOK	20'-0"	E-2
199/2'73	MP-A	1	86	DREW HILL ROAD	BEAVER 131000K	15'-0"	E-2
?12/2i59	CF3	2	90	HAYES ROAD	BEAVER BROOK	13'-3"	NO POSTING REQUIRED

REMARKS:

REVIEWED/REVISED: 9/01

Section 10. MISCELLANEOUS REGULATIONS

10.1 It shall be unlawful for any person to occupy, possess, cause to be stored upon (temporary or otherwise) or deposit any personal articles, materials, structures, barrier or waste products upon any public right-of-way without the expressed written permission of the Board of Selectmen.

10.2 It shall be unlawful for any person to install a fence, gate, wall or structure of any type within the right-of-way of a Class V or Class VI highway, without the expressed written permission of the Highway Agent. In addition, the Town reserves the right to revoke such permission at anytime for any reason.

10.3 It shall be unlawful for any person to erect or install a sign (including temporary signs, real estate signs, painting on rocks or the use of other natural or man-made features as a sign), for commercial advertisement purposes within the right-of-way of a Class V or Class VI highway, to include replacement or improvements to an existing sign which is in violation of the Zoning Ordinance. This Section shall not apply, however, to any political advertising or residential posters which are placed in a manner so as not to violate any other applicable State Laws. The placement of signs for non-profit purposes may be allowed upon written permission by the Selectmen.

10.4 It shall be unlawful for any person to broadcast or emit an amplified voice, sound, siren or recording while traveling upon any public right-of-way, except under the following circumstances: (a) appropriate use of a motor vehicle horn; (b) when necessary to do so by any public safety official; or (c) during a parade or special event when authorized by the Selectmen.

10.5 The Town of Alton shall only authorize the issuance of building permits for the erection or installation of structures whereby the primary means of access is by a Class VI highway and the proposed construction is not associated with a subdivision which has been approved by the Planning Board, provided the permit applicant agrees in writing to hold the Town harmless and immune from any liability or damages that may be attributable to the use of said Class VI highway or a lack of accessibility by emergency vehicles, and furthermore, with the understanding that the Town has no responsibility for the maintenance of the Class VI highway or any portions thereof. In addition, the permit applicant shall furnish evidence that notice of the limits of Town responsibility and liability has been perpetually attached to said property and recorded in the County Registry of Deeds, prior to the issuance of said building permit. (NOTE: refer to Alton Planning Board meeting of February 12, 1996 for compliance with the provisions of RSA 674:41.)

10.6 It shall be unlawful for any person to directly or indirectly cause water to enter upon the traveled way of a Town highway from private property.

10.7 The penalty for a breach of the provisions of Section 10 shall be a violation and fine of not more than one thousand dollars ($1,000.00), per day, or portion thereof in which a violation continues, in accordance with State Law.

10.8 Any object found to be in violation of the provisions of this Section shall be subject to being immediately removed at the owner's expense.

10.9 Any person found to be in violation of the provisions of this Section shall be presumed to be responsible for any and all associated physical damages as may be determined by the Highway Agent and shall be liable for the cost of restoration of the right-of-way to a condition satisfactory to the Highway Agent. In addition, persons violating this Section may be held liable for any personal injuries or damages which may result from non-compliance in accordance with the provisions of RSA 231:109.

10.10 Any person aggri 3oeve8'by a decision of the Highway Agent to impose liability or make repairs as a result of enforcing the provisions of this Section may appeal such a decision to the Board of Selectmen.

10.11 Notwithstanding the authority of the Highway Agent to maintain a Class V highway in a safe condition, the provisions of this Section may be enforced by any duly authorized law enforcement official to the extent permitted by law.

Section 11. RIGHT-OF-WAY PERMITS

11.1 The Town hereby requires specific permits for any of the following activities:

(a) Travel upon a Class V or Class VI highway by heavy equipment for logging or construction activity.

(b) Installation of a culvert, dam, drainage device or bridge within a Class V or Class VI highway right-of-way.

(c) Any type of excavation, digging or disturbance of soil, vegetation or road surface which takes place within a Class V or Class VI highway right-of-way.

(d) Travel upon a Class V highway by a motor vehicle or trailer which exceeds the posted weight limit, including travel over designated roads during a declared "Road Weight Limit Emergency".

(e) Installation or relocation of a utility device such as a pole, underground cable, water line, septic line or any other utility device without a license approved by the Selectmen.

(f) Installation or relocation of a recreation facility or landscaping device such as fence, gate, wall, curbing, light pole, vegetation, etc.

(g) Travel upon a Class V or Class VI highway by unregistered vehicles or OHRV's in accordance with the provisions of RSA 215-A.

11.2 The Highway Agent shall have the initial responsibility for approval or denial of all permits required under this Section.

11.3 Any person required to apply for a permit under this Section shall also be required to post a surety to be used in the event of any damages to a Town highway resulting from the permitted activity.

11.4 Surety amounts shall be determined by the Highway Agent, p vided the minimum surety amount shall not be less than one hundred dollars ($100.00) and the maximum surety amount shall not exceed ten thousand dollars ($10,000.00). The Highway Agent shall promulgate guidelines for determining surety amounts and he/she may accept bonds in lieu of a liquid asset surety in such amounts as may be necessary to repair any likely damages.

11.5 All forms of surety shall be made payable to the Town of Alton. Said sureties shall be held in the custody of the Finance Officer, to be released upon authorization from the Highway Agent within ninety (90) days after the permittee has notified the Highway Agent that the activity has been completed and no physical damages are evident. In addition, the permittee may petition the Highway Agent to release the surety immediately upon completion if no physical damages are evident.

11.6 It shall be the permittee who shall be responsible for any damages, repairs or fines applicable under these policies and regulations. In cases where no permit exists, the Town reserves the right to institute legal proceedings and claims against the violator and/or the property owner.

11.7 Except where otherwise noted, no activity within a Town right-of-way shall take place in relation to an activity covered under this Section prior to an application being approved by the Town of Alton. A copy of the application (as contained in Section 16 of these policies and regulations) with an indication of all actions taken by the authorized Town Official shall be sent to each applicant within twenty-one (21) days of receipt by the Town.

11.8 In the event the Town fails to respond to a permit application within twenty-one (21) days from the date the initial submission is received, the applicant may proceed without being required to comply with the terms of these policies and regulations, however, nothing in this Section shall be construed as relieving the applicant of his/her legal responsibilities to repair any damages.

11.9 Under no circumstances shall a permit be issued under this Section for any purpose which requires access onto or off of a public right-of-way unless the applicant has a valid Driveway Permit.

11.10 In the event a logging operation will require travel by heavy equipment over a Town right-of-way, the Selectmen shall delay action on any "Notice of Intent to Cut" for the maximum thirty (30) day period unless a valid permit has been issued under this

11.11 The, Code Official shall not issue any permit which requires heavy equipment travel over a Town Right-of-Way unless a valid permit has been issued under this Section.

11.12 Only one permit shall be required for any activity covered under this Section.

11.13 Any applicant may appeal a decision of the Highway Agent under this Section to the Board of Selectmen within ten (10) days of receipt of the decision. The Selectmen shall then review the decision during the next regularly scheduled, duly posted, public meeting, at which time the applicant shall be permitted to address the Board. However, any applicant that proceeds to work without a permit shall forfeit their right of appeal.

11.14 In the event physical damages have been found to exist, the Highway Agent shall determine the nature of any repairs to be made at the expense of the permittee. Nothing in this policy shall be construed as a limit upon the landowner or permittee of their rights to seek any claims against the person(s) responsible for any damages, but the Town shall not be made a party to such claims.

11.15 If physical damages have been declared to exist, the Town shall notify the permittee in writing of the location and the extent to which repairs shall be made. Said permittee shall then have thirty (30) days to complete all repairs to the satisfaction of the Highway Agent, otherwise, the Town shall initiate a claim against the permittee and use the surety.

11.16 In the event a claim is made against a surety held by the Town, the permittee shall be entitled to a refund of the remaining amount after repairs (if any), less a two percent (2%) administration fee. The Town reserves the right to file additional claims against the permittee and/or person(s) responsible for damages in the event the amount of damages exceed the surety amount.

11.17 The burden of proof that work or damages has not occurred within a right-of-way covered under this Section shall fall upon the landowner, permittee or transportation company. Although survey documents are not a requirement, plans stamped by a licensed land surveyor shall be given due consideration as an indicator of actual ownership. And, absent any evidence to the contrary, the Town shall assume ownership or control over all land to which the Town holds a deed, within a public right-of-way as measured based upon overall width from the centerline of the traveled way or between rock walls.

11.18 In the event of any damages within a Town right-of-way, the person(s) responsible must contact the Highway Agent within two (2) hours of the incident or any existing permits shall automatically be rescinded.

11.19 Any permit granted by the Town is provided on the condition that the Town shall be indemnified and furthermore, the permittee shall hold the Town harmless for any claims or damages which may result from any activity which takes place under the auspices of the permit.

11.20 Permit holders shall have copies available in every vehicle to which the permit shall apply.

11.21 Copies of permits issued under this Section shall be forwarded to the Police Department and Inspections Department.

11.22 Notwithstanding the authority of the Highway Agent to maintain a Class V highway in a safe condition, the provisions of this Section shall be enforced by any duly authorized law enforcement official to the extent permitted by law.

11.23 In the interest of road protection, the Highway Agent may revoke any Right-of-Way permit at anytime upon notice to the permittee, due to extenuating circumstances such as weather, emergency maintenance operations or other unforeseen events.

Section 12. MAINTENANCE, REPAIRS, RECONSTRUCTION & DRAINAGE

12.1 It shall be the policy of the Town to maintain and repair Class V highways in so much as possible with the manpower, equipment and resources available. However, nothing in this Section shall be construed as an obligation on the part of the Town to be liable for any lack of maintenance or repairs as may be permitted by State Law.

12.2 The Town shall not maintain any Class VI highways or any other roads that are not listed in the Town Inventory. (See Section 8) However, nothing in this Section shall prohibit the Town from performing maintenance on Town owned parking areas.

12.3 The following policy is made with regards to Winter Roads: Prior to October 1st of every year, the Highway Agent shall notify, in writing, appropriate abutters to Winter Roads of all deficiencies in surface conditions which must be corrected at the expense of the abutters, prior to winter maintenance by the Town taking place. If the conditions are not corrected to the satisfaction of the Highway Agent on or before November 15th, the Town shall not perform any winter maintenance, nor shall the Town assume any liability whatsoever for damages which may result due to a lack of maintenance.

12.4 It is the responsibility of every motorist to operate a motor vehicle in a reasonable and safe manner, based upon road and weather conditions. The Town assumes no responsibility for poor judgment or lack of due care which may result in property or personal damages as a result of travel on a public highway, including but not limited to winter hazards, road reconstruction activity, missing or malfunctioning traffic signal devices, poor drainage, washboards and other surface conditions, fallen trees, lack of guardrails, broken or defective guardrails, frost heaves, debris, rocks, ledge, mud, dust, animals in the road, sand, etc.

12.5 The Highway Agent shall respond to all written or verbal notifications of highway or sidewalk insufficiencies in the following manner:

(a). Within eight (8) hours, cause proper danger signals to be placed to warn persons of the problem by day and night; and

(b) Within seventy-two (72) hours, develop a plan to make necessary repairs; and

(c) Implement the repair plan in good faith and with reasonable dispatch until the problem is permanently fixed.

12.6 The time period for a "notice" shall begin whenever any Town official discovers an insufficiency or is notified by a member of the public (whether in writing or over the telephone or in person) that a hazard exists.

12.7 The Town shall not be liable for damages, nor shall the Town pay any monetary amounts (absent a court order) for damages which may result from a hazard for which the Town had no previous notice or knowledge thereof.

12.8 The Town shall not be liable for any damages, nor shall the Town pay any monetary amounts (absent a court order) for damages which may result from snow or ice hazards, provided the Highway Agent is responding to inclement weather conditions in accordance with the following procedures:

(a) Top priority shall be given to winter maintenance on primary travel routes as listed below:

Alton Mountain Road
Alton Shores Road
Avery Hill Road
Chestnut Cove Road
Coffin Brook Road
Dudley Road

Fort Point Woods Road
Halls Hill Road Muchado
Hill Road New Durham
Road Old Wolfeboro Road
Prospect Mountain Road
Rand Hill Road
Roberts Cove Road
Route 11-D

Stockbridge Corner Road
Trask Side Road
Valley Road
Woodlands Rd

(b) Preference shall then be given to emergency maintenance situations based upon a determination that imminent harm may be likely to befall the general public.

(c) In most circumstances, sanding operations will not begin until snow removal has been completed to the greatest extent possible.

(d) As a general rule, the Town will use salt sparingly at the sole discretion of the Highway Agent, and in a manner similar to the application of sand.

(e) The following paved Class V highways will not receive any de-icing agent applications, including salt, except under extraordinary circumstances as may be determined by the Highway Agent:

Alton Mountain Road (in the vicinity of Morse Farm)
Barnes Avenue
Coffin Brook Road
Gilman Corner Road (between Route 28 and Drew Hill Road)
Jesus Valley Road
Powder Mill Road
Quarry Road Rand
Hill Road Range
Road
Rines Road
Riverlake Street Route 11-D
Stagecoach Road
Tom Road

12.9 The Town shall conduct snow and ice maintenance on public sidewalks only upon completion of highway maintenance operations to the extent that manpower and equipment is available.

12.10 During such times as when the Highway Department is performing winter maintenance operations, on-duty Police Officers shall monitor the Highway Department radio frequency.

12.11 In the event of reports of hazardous road conditions or during inclement weather situations which occur when the Highway Department is not on-duty, the following procedures shall be used:

(a) Investigations and monitoring shall be conducted by Police Officers;

(b) The on-duty Police Officer shall use his/her best judgment to determine if the Highway Agent or acting representative needs to be contacted;

(c) A hazard shall only be declared when road conditions pose a clear and immediate danger to motor vehicle travel when unsafe at an appropriate speed;

(d) The Highway Department respondent shall be given precise and accurate directions to the scene of a hazard, to include a description of the nature of the hazard.

12.12 The Town shall not be liable for any damages, nor shall the Town pay any monetary amounts (absent a court order) for damages which may result from snow removal operations to private property, structures, fixtures, or landscaping improvements which are located within a right-of-way.

12.13 The Town has no duty of care whatsoever with respect to the construction, maintenance, or repair of Class VI highways, roads closed subject to gates and bars, discontinued highways or state highways. The Town may, however, at its own discretion, seek to enforce any applicable regulation or its rights of ownership as they may pertain to such rights-of-way to prevent conduct which may be detrimental to public safety or result in damages.

12.14 The Town has no duty whatsoever with respect to the construction, maintenance, use, obstruction, repair or enforcement of deed covenants pertaining to private rights-of-way. The Town will not intervene or get involved in disputes with regards to such matters.

12.15 The Town shall not be liable for any damages, nor shall the Town pay any monetary amounts (absent a court order) for damages which may result from (a) acts or omissions resulting from adherence to these policies and regulations; (b) acts or omissions constituting the exercise of a legislative or judicial function; and (c) the exercise of an executive or planning function involving the making of a basic policy decision which is characterized by the exercise of a high degree of official judgment or discretion.

12.16 In all cases where the Town does not possess deeded drainage easements, it shall be presumed by the Town that all existing highway drainage devices (as of January 1, 1995) which pass onto private property from a Town right-of-way have been heretofore previously established by prescription, and that these prescriptive rights shall exist in perpetuity to be improved, maintained and reconstructed as may be necessary.

12.17 In so much as possible, the Town shall use the drainage easement form contained herein whenever a non-existing drainage means is required for the safety of the public.

12.18 In cases where a person wants the Town to reduce or eliminate its level of road maintenance through a change in highway status, petitions may be submitted in the form of a warrant article for consideration by the voters at the next annual Town Meeting.

12.19 The Highway Department is hereby authorized to remove any and all trees, other vegetation (including soil and lawns) or structures within a Town right-of-way, to the extent that such acts are necessary for public safety and road maintenance. The Town shall notify all abutting landowners with road frontage of pending tree removal operations, at least seventy-two (72) hours in advance, except in the event of an emergency or when the Town possesses a warranty deed to the right-of-way in which case the Town may proceed without prior notification. Landowners along easement rights-of-way who do not object in writing shall be deemed to have authorized the Town to cut and shall waive any claims for damages, or they may petition the Selectmen for compensation. Landowners along easement rights-of-way who prevent the Town from removing trees shall be liable for any damages which may result. Trees which have been cut shall be stacked in four foot (4') lengths adjacent to where they have been cut, for landowner use. All other brush, woodchips and debris shall be conveniently and neatly disposed, except for stumps which shall only be removed by the Town if necessary for road maintenance. Landscaping improvements may be repaired by the Town to the extent that budgeted funds are available, except for structures which were not previously authorized. The Town shall restore legal driveways and repair historic rock walls when impacted due to its road maintenance operations.

12.20 The removal of illegally disposed of trash from Town rights-of-way, shall be the responsibility of Highway Department employees during the normal course of operations, upon being made aware of a problem. However, during such times as when trash is found on a Town right-of-way in such a manner as to pose an immediate threat to public safety when the Highway Department is not on-duty, the responsibility for removal of such items shall be with the Police Department. The Animal Control Officer shall be responsible for the removal of dead animals upon notification by any person.

12.21 The Board of Selectmen may, upon request for a traffic warning sign on any public street or a street name sign on a private road, authorize the Highway Department to install such signs as may be deemed appropriate, provided there is an overwhelming public safety issue and the person making the request agrees to purchase the sign, post, brackets, etc. In addition, the Highway Department may replace any such missing sign previously installed, provided no public funds are used to purchase any materials. The provisions of Section 9.8 shall also apply to this Section.

12.22 During such times as the Town has contracted for or is engaged in maintenance activities on any Class V Highway, the Highway Agent is authorized to temporarily close said road by the erection of barricades and/or signs. Residents of the road will be accommodated to the greatest extent possible.

12.23 During such times as adverse weather conditions render public passage over a Class V or Class VI highway as unsafe or if irreparable damage to a Town road is likely to result from vehicle travel regardless of weight, the Highway Agent is authorized to temporarily close said road by the erection of barricades and/or signs.

12.24 The Town shall not be liable for any damages which may result from any person ignoring a road closed sign. The penalty for a breach of Section 12.22 or 12.23 shall be a violation and a fine of not less than fifty dollars ($50.00) nor more than one hundred dollars ($100.00), in accordance with State Law.

12.25 The Highway Agent shall be authorized to repair private driveways by installing fill and gravel in order to restore access to private property if a wash-out has occurred as a result of a deficient drainage structure located within a Town right-of-way. Under these circumstances, the Town shall not install or pay for the installation of pavement, nor shall the Town assume any responsibility for clean-up.

Section 13. SNOW OBSTRUCTIONS

13.1 It shall be unlawful for any person to put or place or cause to be put or placed any snow or ice upon the surface of the traveled portion of any Class V highway or public sidewalk. The provisions of this Section shall not apply where snow or ice is pushed across the traveled surface of said highway or sidewalk for the purpose of snow removal from land adjoining said highway or sidewalk.

13.2 It shall be unlawful for any person to purposely or knowingly put or place or cause to be placed any snow, ice, or other debris which covers a fire hydrant so as to make it inaccessible for immediate use in the event of a fire.

13.3 The penalty for a breach of this Section shall be a violation and fine for a first offense of not less than twenty-five dollars ($25.00) and the minimum fine for any repeat offenses shall be not less than fifty dollars, nor more than one hundred dollars ($100.00).

13.4 It shall be the policy of the Town to hold the property owner from which the violation is taking place to be liable for any penalties imposed under this Section in the event that the culpable party cannot be identified.

Section 14. FEES

14.1 The fee for a road layout application as described in Section 5 shall be twenty-five dollars ($25.00) plus five dollars ($5.00) per "owner" of abutting property payable upon submission of a petition. In addition, the first petitioner shall be held liable to reimburse the Town for all incidental and related expenses in association with the layout proceedings.

14.2 The fee for a street acceptance application as described in Section 6 shall be one hundred dollars ($100.00) payable upon submission of a petition. In addition, the first petitioner shall be held liable to reimburse the Town for all incidental and related expenses in association with the acceptance proceedings.

14.3 The fee for a driveway permit application as described in Section 7 shall be ten dollars ($10.00) payable upon submission.

14.4 The fee for a right-of-way permit application as described in Section 11 shall be ten dollars ($10.00) payable upon submission.

14.5 The fee for a copy of these policies and regulations shall be five dollars ($5.00) for a resident or taxpayer. The fee for a non-resident shall be ten dollars ($10.00).

14.6 All fees paid shall be non-refundable.

14.7 The Selectmen shall periodically review these fees for the purposes of determining reasonableness and the ability of the Town to recover expenses necessary to process applications.

14.8 The Selectmen may waive any and all fees for government agencies, civic or non-profit organizations.

TOWN OF ALTON

HIGHWAY POLICIES AND REGULATIONS
Effective 1/23/96
Amended 10/6/98

INDEX

Section 1. Enabling Authority

Section 2. Repeal of Previous Regulations, Polices and Ordinances

Section 3. Definitions

Section 4. Minimum Road Standards

Section 5. Road Layout Procedures

Section 6. Street Acceptance / Road Adoption Procedures

Section 7. Driveways

Section 8. Street Inventory

Section 9. Traffic Regulations Section

Section10. Miscellaneous Regulations

Section 11. Right of Way Permits

Section 12. Winter Maintenance, Repairs, Reconstruction & Drainage

Section 13. Snow Obstructions

Section 14. Fees

ALTON HIGHWAY DEPARTMENT

PO Box 659
Letter S Road
Alton, New Hampshire 03809
TEL: 875-6808
FAX: 875-3894

MEMO

TO: RIGHT-OF-WAY PERMIT APPLICANTS

FROM: Kenneth G. Roberts, Highway Agent

DATE: SEPTEMBER 5, 1996

SUBJECT: BOND & SURETY REQUIREMENTS

In accordance with the provisions of Section 11.4 of the Town of Alton Highway Policies and Regulations, the following guidelines are hereby adopted:

Surety requirements for a Right-of-Way Permit shall be as follows:

BITUMINOUS CONCRETE SURFACE = $150.00 PER 4 MILE OF ROAD FARMER'S

MIX/COLD PATCH SURFACE = $125.00 PER 4 MILE OF ROAD TAR

PENETRATED/SAND COATED SURFACE _ $100.00 PERK, MILE OF ROAD GRAVEL

SURFACE = $75.00 PER 4 MILE OF ROAD BRIDGE CROSSING = $400,000.00

MINIMUM'SURETY = $100.00

MAXIMUM ROAD SURETY = $10,000.00 (not including bridges)

Surety payments shall be in the form of a certified check, cashier's check cash personal checks, No Credit Cards will be accepted. In lieu of a surety, the Town will accept a bond in an amount equal to twice the required surety amount.